WIRING DIAGRAM

PREVOST CAR INC.
Le Mirage Bus Shell

40' 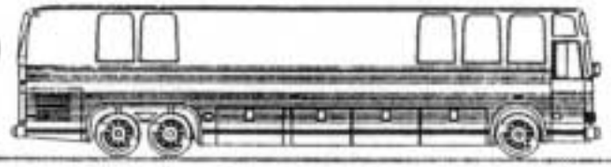 45' 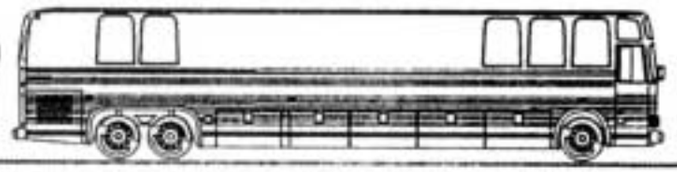

REFERENCE: ENGINE DDEC III S60 (MTH40 & MTH45E)		NO: D060815	
EFF. W/ OC# 93042	PRIOR TO / OC#	DR. MARTIN LAFLAMME	DATE: 94-01-17
EFF. W/ VEH.# R832	PRIOR TO / VEH.#	CK. ROCH CHAMPAGNE	APPR. ROLAND LAPOINTE

REVISION DATE	DESCRIPTION	PAGE	BY	CK.	APPR.
94-01-18	UPDATE	3, 5, 13	R.C.	RC	[illegible]
94-01-19	RADIATOR FAN CLUTCH PRIOR TO R922 OC• 94005 PAGES: C, F, H, I, 3, 5, 12, 13	◄— SEE	R.C.	RC	[illegible]
94-01-19	RADIATOR FAN CLUTCH EFF.W/ R922 OC• 94005 PAGES: Ca, Fa, Ha, Ia, 3a, 5a, 12a, 13a	◄— SEE	R.C.	RC	[illegible]
94-04-14	UPDATE PAGES: A, E, G, K, 3, 3a, 5, 5a, 6, 7, 9, 11, 17, 18	◄— SEE	S.G.	RC	[illegible]
94-05-19	UPDATE PAGES: B, D, G, 3a, 5a, 6, 12, 12a, 13, 13a, 18	◄— SEE	S.G.	RC	[illegible]
94-05-19	FREON 134A PRIOR TO R961 OC•94022 PAGES: 13a	◄— SEE	S.G.	RC	[illegible]
94-05-19	FREON 134A EFF.W/ R961 OC•94022 PAGES: 13b	◄— SEE	S.G.	RC	[illegible]
94-05-23	LUGGAGE CPT. LTS & SW. NEW ARRANG. PRIOR TO S462 OC•94067	Cb ,9	MJ	RC	[illegible]
94-05-23	LUGGAGE CPT. LTS & SW. NEW ARRANG. EFF.W/ S462 OC•94067	Cc, 9a	MJ	RC	[illegible]
94-06-14	UPDATE PAGES: A, F, Fa, 5, 5a, 6, 10, 12, 19	◄— SEE	S.G.	RC	[illegible]
94-09-14	WORLD TRANSMISSION HARNESS (P.E.D. CONNECTOR) PRIOR TO S427 OC•94099	Ca, 4	S.G.	RC	[illegible]
94-09-14	WORLD TRANSMISSION HARNESS (DEUTSCH CONNECTOR) EFF. W/S427 OC•94099	Cb, 4a	S.G.	RC	[illegible]
94-10-24	UPDATE PAGES: Cc, Ha, 12a, 13b, 18	◄— SEE	R.C.	RC	[illegible]
94-11-14	JACOB OR RETARDER SWITCH PRIOR TO S546 O.C.•94155 PAGES:Cc	◄— SEE	S.G.	RC	[illegible]
94-11-14	JACOB OR RETARDER SWITCH EFF.W/S546 O.C.•94155 PAGES:Cd	◄— SEE	S.G.	RC	[illegible]
94-11-14	UPDATE PAGES: I, Ia, 12a	◄— SEE	S.G.	RC	[illegible]
94-11-17	WORLD TRANSM. ECU V7 PRIOR TO S464, OC•94157	16	MJ	RC	[illegible]
94-11-17	WORLD TRANSM. ECU V7 EFF. W/464, OC•94157	16a	MJ	RC	[illegible]
95-02-23	SUN VISOR NEW OPTION EFF. W/567, OC•95015	20	MJ	RC	[illegible]
95-02-23	UPDATE PAGES: A, Cd, E, F, Fa, G, 2, 6, 10, 12, 12a, 13, 13a, 13b, 18	◄— SEE	MJ	RC	[illegible]
95-03-15	ABS IN CARRIER PRIOR TO S571 OC•94162	Cd, 17	MJ	RC	[illegible]
95-03-15	ABS IN CARRIER EFF. W/S571 OC•94162	Ce, 17a	MJ	RC	[illegible]
95-03-15	UPDATE	G,Ia,5,5a,Fa	MJ	RC	[illegible]

PREVOST CAR inc. Le Mirage Bus Shell 40', 45'

NO: D060815 p. 2/2

REVISION DATE	DESCRIPTION	PAGE	BY	CK.	APPR.
95-04-28	FIRE ALARM PRIOR TO S591 O.C.*95025	5a	S.G.		
95-04-28	FIRE ALARM EFF. W/S591 O.C.*95025	5b	S.G.		
95-04-28	UPDATE	B,G,J	S.G.		

INDEX

A
- A/C & HEAT SYSTEM-STANDARD P. 12
- A/C & HEAT SYSTEM-FULL AIR P. 13
- AIR DRYER P. 5
- ALARM AND SIGNAL P. 5
- ABS P. 17
- ARRANGEMENT - CABLE P. B
- ARRANGEMENT - HARNESS P. C
- ARRANGEMENT - SPARE WIRE P. D

B
- BACK-UP ALARM P. 5

C
- CHARGING SYSTEM P. 1
- CENTER DOOR-AIR LOCK P. 11
- CIGAR LIGHTER P. 14
- CODE - CIRCUIT NUMBER P. E
- CODE - CIRCUIT BREAKER P. F
- CODE - CONNECTOR P. g
- CODE - DIODE P. H
- CODE - RELAY P. I
- CODE - RESISTOR P. J
- CODE - WIRING KEY P. K
- CO-PILOT SEAT HEATER P. 15
- CRUISE CONTROL - D.D.E.C. P. 3

D
- D.D.E.C. III P. 3
- DIFFERENTIAL OIL TEMP. P. 5
- DRIVER'S SEAT ELEC. ADJUST. P. 15
- DRIVER'S SEAT HEATER P. 15

E
- ENGINE BLOCK HEATER P. 11
- ENGINE BRAKE SYSTEM P. 15
- ENGINE CONTROL P. 2
- ENTRANCE DOOR (AIR LOCK) P. 11
- ETHER COLD START P. 5
- EXTERIOR LIGHTING P. 6

F
- FAN CLUTCH-RADIATOR P. 5
- FUEL PRIME PUMP P. 20
- FUEL WATER FILTER P. 5

I
- INTERIOR LIGHTING P. 9

L
- LEVEL-LOW SYSTEM P. 19
- LUGGAGE DOOR LOCK P. 16

M
- MIRROR-RR VIEW ADJUST. & HEATED P. 14

P
- PARKING BRAKE SWITCH P. 5
- PARKING BRAKE ALARM P. 11
- PRODRIVER P. 11
- PYROMETER P. 16

R
- RETARDER P. 15

S
- SPEEDOMETER (VDO) P. 16
- SUN VISOR P. 20

T
- TACHOMETER (VDO) P. 16

W
- WATER HEATER PRE-HEAT P. 18
- WINDOW AJAR P. 11
- WIPER & WASHER WINDSHIELD P. 8
- WORLD TRANSMISSION P. 4

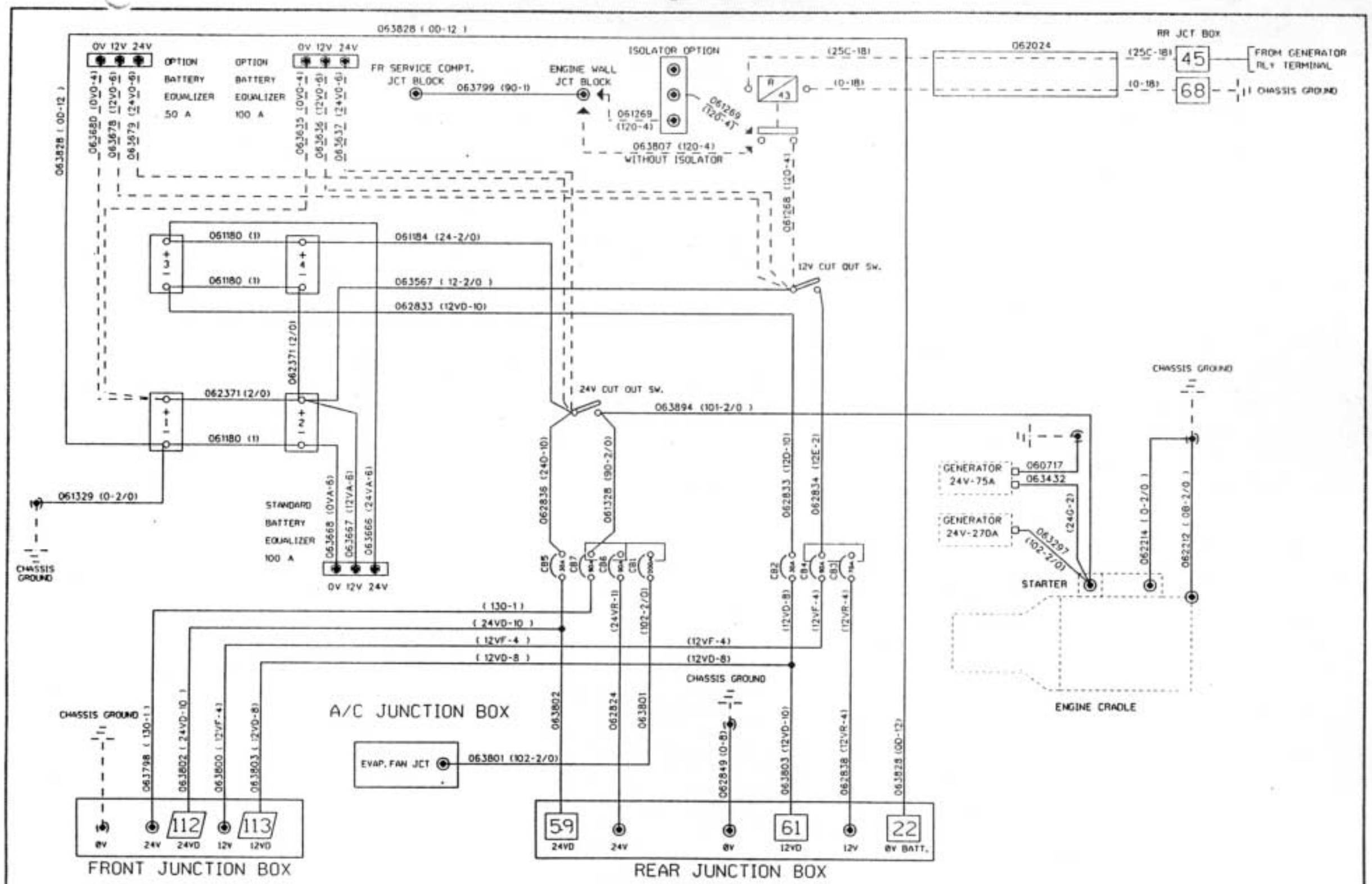

PREVOST CAR inc.	WIRING DIAGRAM	NO: D060815	REVISION DATE 95-04-28	P. B 1/2

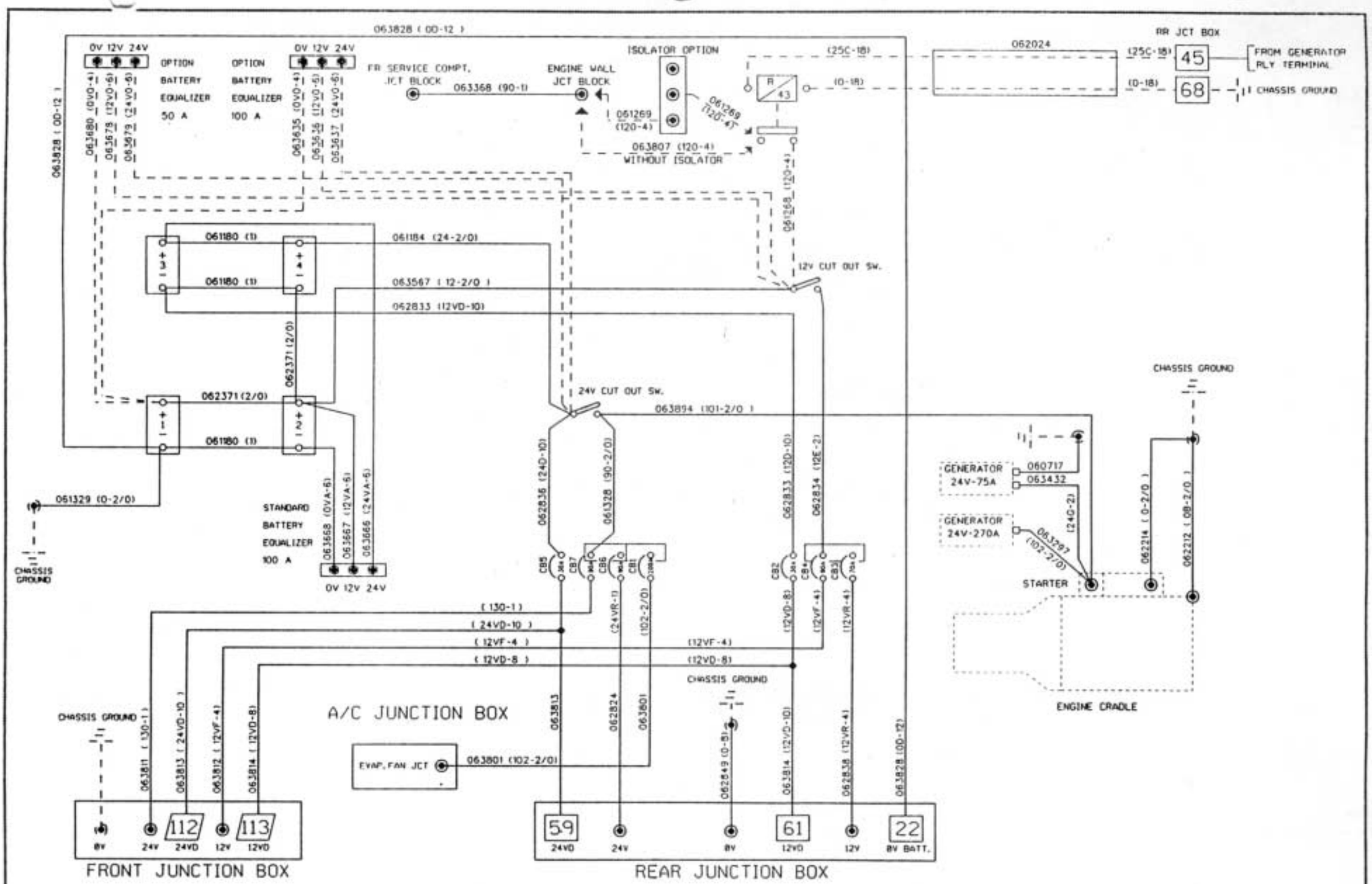

45' STRETCH (ME)

PREVOST CAR inc.	WIRING DIAGRAM	NO: D060815	REVISION DATE 95-04-28	P.B 2/2

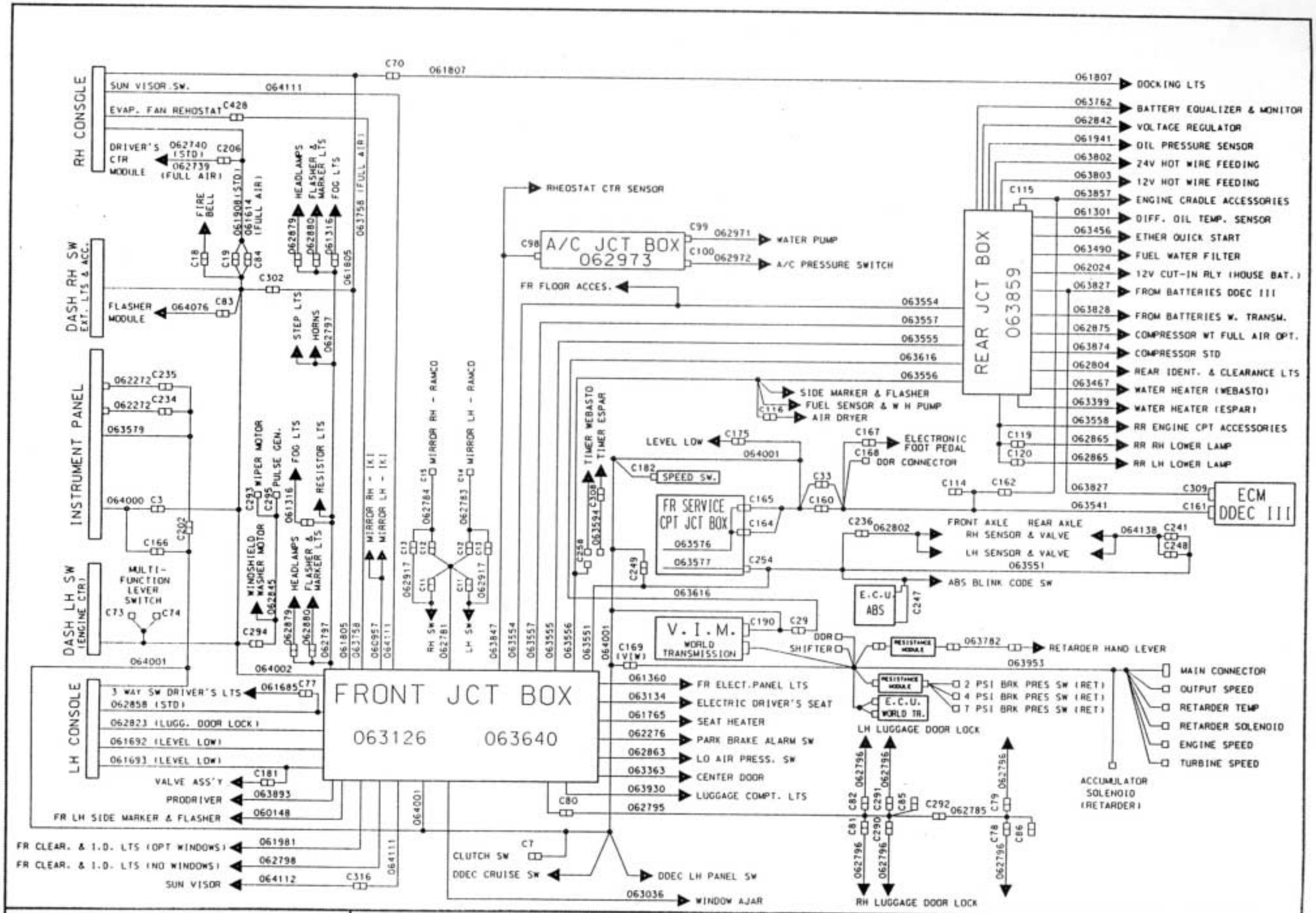

PREVOST CAR inc.	WIRING DIAGRAM	NO: D060815	REVISION DATE 95-03-15	P.Ce ½

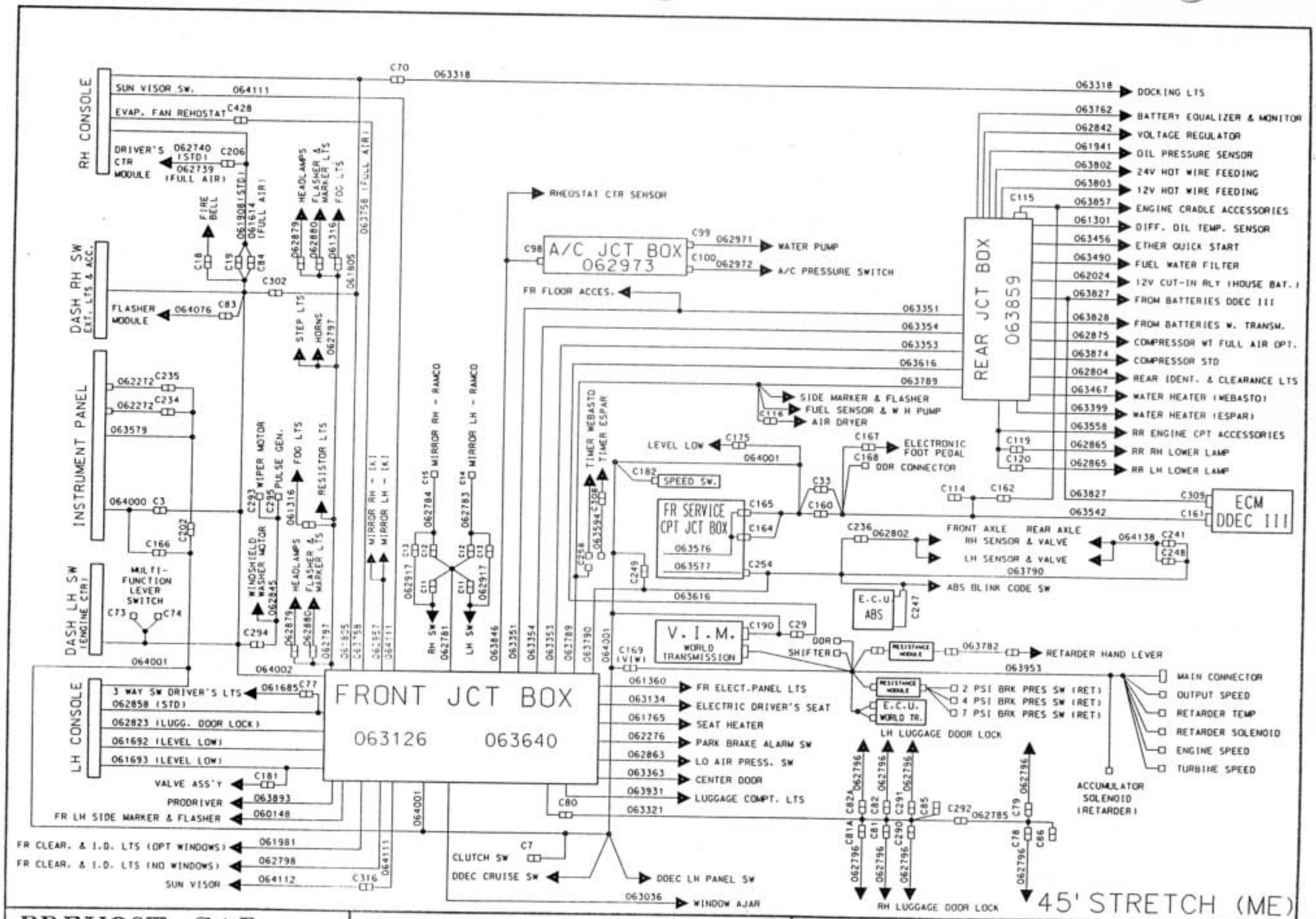

PREVOST CAR inc.	WIRING DIAGRAM	NO: D060815	REVISION DATE 95-03-15	P. Ce 2/2

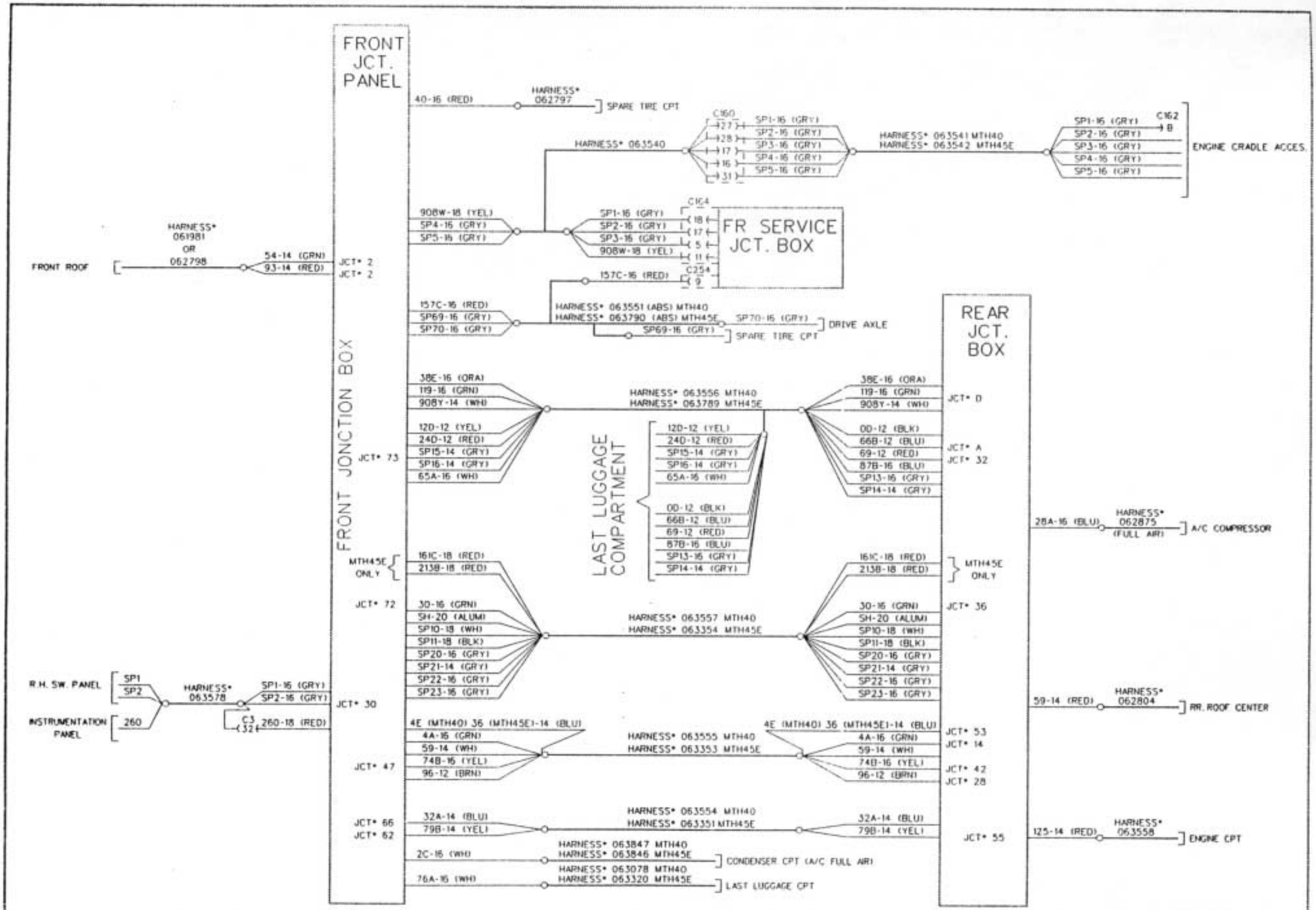

PREVOST CAR inc.	WIRING DIAGRAM	NO: D060815	REVISION DATE 94-05-19	P. D

No.	SYSTEM
0	GRD BATTERY 1 TO BATTERY 2
0	GRD BATTERY 1 TO GRD STUD
0	GRD STARTER MOTOR TO GRD STUD
0	FJP - INSIDE GRD
0	RJB - INSIDE GRD
0	ATEC1 TEST SW GRD
0A	A/C - A/C JCT BOX GRD
0A	FJP - GRD
0A	RJB - GRD
0AA	VOLTAGE REGULATOR GRD
0B	FJP - GRD
0B	RJB - GRD
0BE	0V BATTERY MONITOR
0C	FJP - GRD
0C	RJB - GRD
0D	FJP - GRD
0D	RJB - BATTERY GRD
0E	FJP - GRD
0E	RJB - GRD
0G	FJP - GRD
0J	FJP - GRD
0P	RJB - GRD
0S	FJP - SUN VISOR GRD
0T	RJB - UNLOAD TAG GRD
0T	FR SERVICE CPT-GRD
0VA	GRD BATTERY 2 TO BAT.EQUALIZER
0W	FJP - GRD
0W	WORLD TRANSM. VIM CHASSIS GRD
0WA	PRE-HEAT WATER HEATER
0WB	PRE-HEAT WATER HEATER
0X	DDEC II-COOLANT MODULE GRD
0Y	ABS SYSTEM-GRD
0Y1	ABS SYSTEM-GRD
0Z	DDEC II-COOLANT MODULE GRD
00	BATTERY GRD
2	A/C & HEAT SYSTEM-CONSENSER
2A	A/C & HEAT SYSTEM-CONSENSER
2D	A/C & HEAT SYSTEM-CONSENSER
3	A/C & HEAT SYSTEM-EVAPORATOR
3	A/C & HEAT SYSTEM-CLUTCH SW
3A	A/C & HEAT SYSTEM-EVAPORATOR
6	EXTERIOR LTS-DOCKING
6A	EXTERIOR LTS-CORNERING
6B	EXTERIOR LTS-CORNERING
6B1	EXTERIOR LTS-CORNERING RH
6C	EXTERIOR LTS-CORNERING
6C1	EXTERIOR LTS-CORNERING LH
6D	EXTERIOR LTS-DOCKING
6E2	EXTERIOR LTS-CORNERING LH
6F1	EXTERIOR LTS-CORNERING RH
7	ENTRANCE DOOR
8A	DDEC II-STP ENG. OVERRIDE
9	INTERIOR LTS-ENGINE CPT
9	INTERIOR LTS-RR JCT BOX
9	INTERIOR LTS-FR SERVICE CPT
9A	INTERIOR LTS-FR JCT PANEL
9B	INTERIOR LTS-FR JCT PANEL
9C	INTERIOR LTS-FR SERVICE CPT
9E	INTERIOR LTS-LUGGAGE CPT

No.	SYSTEM
10	A/C & HEAT SYSTEM-LO PRES.
10	INTERIOR LTS-LUGGAGE CPT
10A	INTERIOR LTS-LUGGAGE CPT
10A	A/C & HEAT SYSTEM-HI PRES.
10B	INTERIOR LTS-LUGGAGE CPT
10D	INTERIOR LTS-LUGGAGE CPT
10E	INTERIOR LTS-LUGGAGE CPT
12	12V CUT OUT SW TO BATTERY
12	FR JCT PANEL 12V DISC SW
12	ENTRANCE DOOR AIR LOCK
12A	FR JCT PANEL 12V DISC SW
12A	RR JCT BOX 12V DISC SW
12A	ENTRANCE DOOR AIR LOCK
12B	FR JCT PANEL 12V DISC SW
12B	RR JCT BOX 12V DISC SW
12BE	12V BATTERY MONITOR
12C	FR JCT PANEL 12V DISC SW
12C	RR JCT BOX 12V DISC SW
12D	FR JCT PANEL 12V DISC SW
12D	RR JCT BOX 12V DISC SW
12E	FR JCT PANEL 12V DISC SW
12E	RR JCT BOX 12V DISC SW
12F	FR JCT PANEL 12V DISC SW
12G	FR JCT PANEL 12V DISC SW
12I	RR JCT BOX 12V IGNITION
12I	FR JCT PANEL 12V IGNITION
12IA	FR JCT PANEL 12V IGNITION
12IF	FR JCT PANEL 12V IGNITION
12T	RR JCT BOX 12V DISC SW
12T	RR JCT BOX 12V DISC SW
12V	RR JCT BOX 12V DISC SW
12VA	12V BATTERY POST TO EQUALIZER
12VD	12V HOT WIRE
12VDF	12V HOT WIRE FJB
12VDR	12V HOT WIRE RJB
12VF	12V FR JCT PANEL
12VIF	FR JCT PANEL 12V IGNITION
12VIR	RR JCT BOX 12V IGNITION
12VR	12V RR JCT BOX
12W	12V HOT WIRE DDEC III FEED
13A	ALARM & SIGNAL-LO AIR PRIM.
13B	ALARM & SIGNAL-LO AIR SEC.
15	EXTERIOR LTS-MULTI FUNC LEVEL
15	ALARM & SIGNAL-DIF. OIL TEMP
15	WIPER & WASHER SYSTEM
15A	ALARM & SIGNAL-DIF. OIL TEMP
16	SPEEDOMETER SIGNAL (+)
16T	SPEED SW SIGNAL IN (+)
17	EXTERIOR LTS-FLASHER UNIT
17A	EXTERIOR LTS-FLASHER UNIT
18	ETHER COLD START SYST.
19	SPARE - RJB TO RR ROOF RH
20	SPEEDOMETER SIGNAL (-)
20T	SPEED SW SIGNAL IN (-)
21	EXTERIOR LTS-DIRECTIONNAL LH
21A	EXTERIOR LTS-DIRECTIONNAL LH
21B	EXTERIOR LTS-DIRECTIONNAL LH
21C	EXTERIOR LTS-DIRECTIONNAL LH
21H	EXTERIOR LTS-HAZARD SIGNAL

CIRCUIT NUMBER CODE Page E : 1

No.	SYSTEM
23	EXTERIOR LTS-DIRECTIONNAL RH
23A	EXTERIOR LTS-DIRECTIONNAL RH
23B	EXTERIOR LTS-DIRECTIONNAL RH
23C	EXTERIOR LTS-DIRECTIONNAL RH
23H	EXTERIOR LTS-HAZARD SIGNAL
24	BATTERY 3 TO BATTERY 4
24	BATTERY 4 TO 24V DISC SW
24A	RR JCT BOX 24V DISC SW
24A	FR JCT PANEL 24V DISC SW
24B	RR JCT BOX 24V DISC SW
24B	FR JCT PANEL 24V DISC SW
24BE	BATTERY MONITOR
24C	RR JCT BOX 24V DISC SW
24C	FR JCT PANEL 24V DISC SW
24E	FR JCT PANEL 24V DISC SW
24E	RR JCT BOX 24V DISC SW
24F	FR JCT PANEL 24V DISC SW
24G	FR JCT PANEL 24V DISC SW
24I	FR JCT PANEL 24V IGNITION
24I	RR JCT BOX 24V IGNITION
24IA	FR JCT PANEL 24V IGNITION
24IA	RR JCT BOX 24V IGNITION
24IB	FR JCT PANEL 24V IGNITION
24IB	RR JCT BOX 24V IGNITION
24IF	FR JCT PANEL 24V IGNITION
24P	FR JCT PANEL 24V DISC SW
24R	24V RR JCT BLK TO STARTER
24S	FJP 24V DISC SW-SUN VISOR
24T	FR JCT PANEL 24V DISC SW
24VA	24V BATTERY POST TO EQUALIZER
24VI	FR JCT PANEL 24V IGNITION
24VIF	FR JCT PANEL 24V IGNITION
24VIR	RR JCT BOX 24V IGNITION
24VD	24V HOT WIRE
24VF	FR JCT PANEL 24V DISC SW
24VR	RR JCT BOX 24V DISC SW
24X	24V SPEED SW & LEVEL LOW
25	12VAC GEN RLY ON SIGNAL
25A	NOT GENERATOR-WARNING LT
25B	EXTERIOR LTS-DAYTIME RUN LTS
25C	12VAC GEN RLY ON SIGNAL
25K	12VAC GEN RLY ON SIGNAL
25L	12VAC GEN RLY ON SIGNAL
26A	ATEC1-NEUTRAL SIGNAL
28	A/C & HEAT SYSTEM-WARNING LT
28A	A/C & HEAT SYSTEM-WARNING LT
29	A/C & HEAT SYSTEM-DRIVER'S HTR
29A	A/C & HEAT SYSTEM-DRIVER'S HTR
29B	A/C & HEAT SYSTEM-DRIVER'S HTR
31	A/C & HEAT SYSTEM-WARNING LT
31A	A/C & HEAT SYSTEM-WARNING LT
31A	A/C & HEAT SYSTEM-PRESSURE SW
31B	A/C & HEAT SYSTEM-PRESSURE SW
31B	WIPER & WASHER SYSTEM
32	EXTERIOR LTS-BACK-UP
32B	EXTERIOR LTS-BACK-UP
32D	BACK-UP ALARM
34	A/C & HEAT SYSTEM-CONDENSER
35	INTERIOR LTS-ENTRANCE DOOR

No.	SYSTEM
36	ENGINE BRAKE SYSTEM & RETARDER
36A	ENGINE BRAKE SYSTEM
36C	ENGINE BRAKE SYSTEM
38	FUEL WATER FILTER
39	INTERIOR LTS-DRIVER'S LTS
39A	INTERIOR LTS-DRIVER'S LTS
39B	INTERIOR LTS-DRIVER'S LTS
39C	INTERIOR LTS-DRIVER'S LTS
40	SPARE - F.J.PANEL TO F.SERV CPT
43	A/C & HEAT SYSTEM-FULL AIR
44	EXTERIOR LTS-FOG
44A	EXTERIOR LTS-FOG
44B	EXTERIOR LTS-FOG
44C	EXTERIOR LTS-FOG & HAZARD SW
45	A/C & HEAT SYSTEM-DRIVER'S CTHL
45	A/C & HEAT SYSTEM-FULL AIR
45A	A/C & HEAT SYSTEM-FULL AIR
45G	A/C & HEAT SYSTEM-DRIVER'S HTR
46	EXTERIOR LTS-MARKER
46A	EXTERIOR LTS-MARKER
46B	EXTERIOR LTS-MARKER
46C	EXTERIOR LTS-MARKER
47	A/C & HEAT SYSTEM-DRIVER'S HTR
47	A/C & HEAT SYSTEM-FULL AIR
50	AIR DRYER
52	ALARM & SIGNAL-ELEC. HORN
52A	ALARM & SIGNAL-ELEC. HORN
53	ALARM & SIGNAL-ELEC. HORN
53B	WIPER & WASHER SYSTEM
53C	WIPER & WASHER SYSTEM
53E	WIPER & WASHER SYSTEM
53F	WIPER & WASHER SYSTEM
53J	WIPER & WASHER SYSTEM
54	SPARE-F.J.B. TO FR ROOF
55	EXTERIOR LTS-HI BEAM
56	TRANSM. OIL TEMP GAUGE
57	EXTERIOR LTS-HI BEAM
57	A/C & HEAT SYSTEM-WATER PUMP
57A	EXTERIOR LTS-HI BEAM
57B	A/C & HEAT SYSTEM-WATER PUMP
57C	PRE-HEAT WATER HEATER
57C	A/C & HEAT SYSTEM-WATER PUMP
57D	PRE-HEAT WATER HEATER
57E	PRE-HEAT WTR HTR PUMP
57F	PRE-HEAT WATER HEATER
58	EXTERIOR LTS-LO BEAM
58A	EXTERIOR LTS-LO BEAM
58B	EXTERIOR LTS-LO BEAM
58E	EXTERIOR LTS-LO BEAM
59A	ENGINE BRAKE SYSTEM
60	EXTERIOR LTS-RR & FR ROOF GRD
61	EXTERIOR LTS-24V FEED SW
61A	EXTERIOR LTS-HEAD SIGNAL
62	LEVEL-LOW SYSTEM
63	EXTERIOR LTS-CLEARANCE
63A	EXTERIOR LTS-CLEARANCE

No.	SYSTEM
63B	EXTERIOR LTS-CLEARANCE
63C	EXTERIOR LTS-MARKER SIGNAL
63D	EXTERIOR LTS-MARKER & TAIL
63E	EXTERIOR LTS-CLEARANCE
63F	EXTERIOR LTS-MARKER BLINKER
63H	EXTERIOR LTS-TAIL
63K	EXTERIOR LTS-TAIL
64	DIFFERENTIAL OIL TEMP GAUGE
65A	CENTER DOOR AIR LOCK
76C	LOW FUEL T.T. LT.
67	A/C & HEAT SYSTEM
67A	A/C & HEAT SYSTEM
67B	A/C & HEAT SYSTEM
67C	A/C & HEAT SYSTEM
70B	24V IGN RR CTRL SW
71	BACK-UP CANCEL SW
71B	BACK-UP CANCEL SW
72	BACK-UP CANCEL SW
72	SPARE F.J.B. TO R.J.B.
72B	SUN VISOR
72C	SUN VISOR
72D	SUN VISOR
72E	SUN VISOR
72S	SUN VISOR
76	FUEL TANK GAUGE
76A	CENTER DOOR AJAR LT
76L	LOW FUEL LT
76M	FUEL PRIME PUMP
76P	FUEL PRIME PUMP
77	A/C & HEAT SYSTEM
77B	A/C & HEAT SYSTEM
77C	A/C & HEAT SYSTEM-COMPRESSOR
77H	A/C & HEAT SYSTEM-FAN CLUTCH
80	WORLD TRANSM-NEUTRAL SIGNAL GRD
81	EXTERIOR LTS-STOP SW
82	EXTERIOR LTS-STOP SIGNAL
82A	EXTERIOR LTS-STOP SIGNAL
82B	EXTERIOR LTS-STOP LTS
82K	EXTERIOR LTS-STOP RETARDER
82L	EXTERIOR LTS-STOP LTS
82R	EXTERIOR LTS-STOP LTS
83	ENGINE CTR-MAST KEY SW ACCES
83A	DDEC II-COOLANT LEVEL PROBE
84	ENGINE CTR-MAST KEY SW START
84A	ENGINE CTR-MAST KEY SW START
85	ENGINE CTR-MAST KEY SW IGN
85A	24V IGN DASH INSTRUMENTATION
85B	ENGINE CTR-24V IGNITION
85C	PARKING BRAKE SWITCH
85F	LO AIR SONALERT
85W	ABS-24V IGN
85X	ABS-24V IGN
85Y	ABS-WARNING LT
86	ENGINE CTR-STARTER SOL SIGN
86A	ENGINE CTR-STARTER SOL SIGN
87B	ENGINE CTR-24V IGNITION
88	ENGINE CTR-RR START SIGNAL
89	ENGINE CTR-RR START SIGNAL
90	A/C & HEAT SYSTEM-WATER PUMP
90A	ENGINE CTR-MAST KEY SW FEED
90B	A/C & HEAT SYSTEM-COND FAN MOT
90B	ENGINE CTR-MAST KEY SW FEED
90B	FR JCT PANEL 24V DISC SW
90C	ALARM & SIGNAL-FIRE DETECTOR
90F	CHARG SYST-VOLTAGE REGUL. "B"
91	PARKING BRAKE SW SIGNAL
91A	PARKING BRAKE SW SIGNAL
91B	DDEC III-FAST IDLE SIGNAL
91B	EXTERIOR LTS-RUN LTS CANCEL
91M	PARKING BRAKE ALARM
91N	PARKING BRAKE ALARM
92	BATTERY EQUALIZER-CHECK BALANCE
93	BATTERY EQUALIZER-CHECK LO/HI
95	ENGINE BRAKE & RETARDER SYSTEM
95A	ENGINE BRAKE & RETARDER SYSTEM
95B	ENGINE BRAKE & RETARDER SYSTEM
97	TACHOMETER-NOT USE
99A	FR SERVICE JCT BOX 12V HOT WIRE
100B	BACK-UP CANCEL SW
101	24V DISC SW TO STARTER
101	WORLD TRANSM-LO SIGNAL SOL. LO
102	24V STARTER TO GENERATOR
102	24V DISC SW TO A/C JCT BOX
102	WORLD TRANSM-SOL. GRD 1
102	WORLD TRANSM-SOL. C3
104	LEVEL-LOW SYSTEM
104	WORLD TRANSM-SOL. FORWARD
105	WORLD TRANSM-RETARDER & SUMP
106	WORLD TRANSM-OIL LEVEL HI
107	CHARG SYST-VOLTAGE REGUL. "F"
107	WORLD TRANSM-LOCKUP SOL. HI
108	WORLD TRANSM-REMOTE PWR WAKE UP
109	WORLD TRANSM-RET. SOL. LO
110	ALARM & SIGNAL-WATER TEMP
110	WORLD TRANSM-LOCKUP SOL. LO
111	BATTERY GRD
111	WORLD TRANSM-SOL. C6
112	WORLD TRANSM-SPARE OUTPUT (+)
112	BACK-UP SIGNAL
113	ALARM & SIGNAL-OIL PRESS
113	WORLD TRANSM-REVERSE WARNING
114	WORLD TRANSM-SPARE OUTPUT (-)
114	INTERIOR LTS-DASH LT REGUL.
114A	INTERIOR LTS-DASH LT
114B	INTERIOR LTS-DASH LT REGUL.
114C	INTERIOR LTS-DASH LT
115	ALARM & SIGNAL-TAG PRESS
115	DDEC III-COOLANT LEVEL
115	WORLD TRANSM-DO NOT SHIFT SIGNAL
115A	ALARM & SIGNAL-TAG PRESS
115B	ALARM & SIGNAL-TAG PRESS
115C	DDEC III-COOLANT LEVEL
116	WORLD TRANSM-LO SIGNAL SOL. HI
116A	A/C & HEAT SYSTEM-DRIVER'S HTR
116B	A/C & HEAT SYSTEM-DRIVER'S HTR
117	WORLD TRANSM-SPARE INPUT (-)
117	ALARM & SIGNAL-TRANSM OIL TEMP
117A	ALARM & SIGNAL-TRANSM OIL TEMP
118	WORLD TRANSM-SPARE INPUT (+)
118	DRIVER'S & CO-PILOT SEAT HTR
118A	DRIVER'S & CO-PILOT SEAT HTR
119	WORLD TRANSM-ENGINE BRAKE
120	12V HOT WIRE-DISC SW TO FJP
120	WORLD TRANSM-SOL. C1
121	WORLD TRANSM-SOL. GRD 2
121	CIGAR LIGHTER
122	A/C & HEAT SYSTEM-DRIVER'S HTR
122	A/C & HEAT SYSTEM-FRESH AIR
122	WORLD TRANSM-SOL. GRD 4
123	WORLD TRANSM-NEUTRAL START
123	ALARM & SIGNAL-FIRE DETECTOR
123A	ALARM & SIGNAL-FIRE DETECTOR
124	WORLD TRANSM-THROTTLE (HI)
125	WORLD TRANSM-RETARDER INDICATOR
125W	WORLD TRANSM-RETARDER INDICATOR
126	WORLD TRANSM-LUBE PRESS SW.
126	CENTER DOOR AIR LOCK
127	WORLD TRANSM-RETARDER FEED SOL.
127	PRE-HEAT WATER HEATER
127A	PRE-HEAT WATER HEATER
127W	PRE-HEAT WATER HEATER
127X	PRE-HEAT WATER HEATER
128	WORLD TRANSM-SOL. C2
128A	PRE-HEAT WATER HEATER
128B	PRE-HEAT WATER HEATER
128C	PRE-HEAT WATER HEATER
128D	PRE-HEAT WATER HEATER
128W	PRE-HEAT WATER HEATER
128X	PRE-HEAT WATER HEATER
129	WORLD TRANSM-SOL. C5
129	PRE-HEAT WATER HEATER
129A	PRE-HEAT WATER HEATER
129B	PRE-HEAT WATER HEATER
130	WORLD TRANSM-SOL. GRD 3
130	A/C & HEAT SYSTEM-EVAPORATOR
131	24V DISC SW TO FR JCT PANEL
131	WORLD TRANSM-SOL. C4
132	WORLD TRANSM-ENGINE BRAKE
132B	LEVEL-LOW SYSTEM
132C	LEVEL-LOW SYSTEM
132D	LEVEL-LOW SYSTEM
132E	LEVEL-LOW SYSTEM
132W	WORLD TRANSM-ENGINE BRAKE
132-1A	LEVEL-LOW SYSTEM
132-1B	LEVEL-LOW SYSTEM
132-1C	LEVEL-LOW SYSTEM
132-2A	LEVEL-LOW SYSTEM
132-2B	LEVEL-LOW SYSTEM
132-2C	LEVEL-LOW SYSTEM
133	WORLD TRANSM-RET. ACTUATOR HI
134	WORLD TRANSM-RET. APPLY SOL. HI
135	WORLD TRANSM-ANALOG GRD
135	A/C & HEAT SYSTEM-AIR SENSOR
135A	A/C & HEAT SYSTEM-AIR SENSOR
135C	A/C & HEAT SYSTEM-AIR SENSOR
135D	A/C & HEAT SYSTEM-AIR SENSOR
136	GALLEY-ACCESSORIES
136	WORLD TRANSM-ECU POWER
136V	WORLD TRANSM-12V BATTERY
136W	WORLD TRANSM-12V BATTERY
136X	WORLD TRANSM-12V BATTERY
137	WORLD TRANSM-RETARDER
137	RR VIEW MIRROR
137A	RR VIEW MIRROR
138	WORLD TRANSM-RETARDER TEMP
138	ABS SYSTEM
138A	ABS SYSTEM
139	ABS SYSTEM
139	WORLD TRANSM-OUTPUT SPEED HI
140	WORLD TRANSM-OUTPUT SPEED LO
140	ABS SYSTEM
141	ABS SYSTEM
141	WORLD TRANSM-ENGINE SPEED HI
142	ABS SYSTEM
142	WORLD TRANSM-SERIAL COM. A
143	ABS SYSTEM
143A	ABS SYSTEM
143	WORLD TRANSM-ECU BATTERY GRD
143W	WORLD TRANSM-BATTERY GRD
143X	WORLD TRANSM-BATTERY GRD
144	WORLD TRANSM-ECU CHASSIS GRD
144	ABS SYSTEM
144A	ABS SYSTEM
145	ABS SYSTEM
146	ABS SYSTEM
146	WORLD TRANSM-IGNITION SENSE
146W	WORLD TRANSM-12V IGNITION
146X	WORLD TRANSM-12V IGNITION
147	WORLD TRANSM-OIL TEMP
147	ABS SYSTEM
147	ETHER COLD START
147C	ETHER COLD START
148	ABS SYSTEM
148	WORLD TRANSM-OUTPUT SPEED LO
149	WORLD TRANSM-TURBINE SPEED HI
149	ABS SYSTEM
149A	ABS SYSTEM
150	ABS SYSTEM-SPARE
150	WORLD TRANSM-ENGINE SPEED LO
150	DDEC III-ECM BATTERY GRD
150A	DDEC III-ECM BATTERY GRD
151	DDEC III-ECM BATTERY GRD
151	WORLD TRANSM-SERIAL COM. B
151	ABS SYSTEM-SPARE
152	ABS SYSTEM-SPARE
153	ABS SYSTEM
153	ELECTRICAL DRIVER'S SEAT
153	WORLD TRANSM-SPARE INPUT (-)
154	WORLD TRANSM-ABS INPUT
155	WORLD TRANSM-SPARE INPUT (-)
155	ABS SYSTEM
156	WORLD TRANSM-THROTTLE POS. SIGNAL

No.	SYSTEM
156A	ABS SYSTEM
156C	ABS SYSTEM
156W	ABS SYSTEM
157	ABS SYSTEM
157	WORLD TRANSM-SPEEDOMETER SIGNAL
157A	ABS SYSTEM
157B	ABS SYSTEM
157C	ABS SYST.-CANCEL SEC. BRK
158	WORLD TRANSM-DIMMER
160	WORLD TRANSM-SER. INTERFACE (-)
161	WORLD TRANSM-SIGNAL GRD
161B	WORLD TRANSM-SIGNAL GRD
162	WORLD TRANSM-PRESS. SW C3
163	WORLD TRANSM-RETARDER ENABLE
164	WORLD TRANSM-RET. ACTUATOR SIGN
165	WORLD TRANSM-OIL LEVEL SIGNAL
168	WORLD TRANSM-SER. INTERFACE (+)
170C	LUGGAGE DOOR LOCK
170D	LUGGAGE DOOR LOCK
170E	LUGGAGE DOOR LOCK
170F	LUGGAGE DOOR LOCK
170G	LUGGAGE DOOR LOCK
170H	LUGGAGE DOOR LOCK
170J	LUGGAGE DOOR LOCK
170L	LUGGAGE DOOR LOCK
170M	LUGGAGE DOOR LOCK
170N	LUGGAGE DOOR LOCK
170P	LUGGAGE DOOR LOCK
170R	LUGGAGE DOOR LOCK
170S	LUGGAGE DOOR LOCK
170V	LUGGAGE DOOR LOCK
170W	LUGGAGE DOOR LOCK
170X	LUGGAGE DOOR LOCK
170Y	LUGGAGE DOOR LOCK
170Z	LUGGAGE DOOR LOCK
182	PYROMETER
182A	PYROMETER
201	WORLD TRANSM-SPARE
202	WORLD TRANSM-SPARE
203	WORLD TRANSM-SPARE
204	WORLD TRANSM-SPARE
205	WORLD TRANSM-SPARE
206	WORLD TRANSM-SPARE
214	WORLD TRANSM-BACK UP SIGNAL
214A	WORLD TRANSM-BACK UP SIGNAL
231	WORLD TRANSM-NEUTRAL SIGNAL GRD
240	DDEC III-ECM 12V FEEDING
241	DDEC III-ECM 12V FEEDING
251	PRODRIVER-12V HOT WIRE
260	WINDOW AJAR
290	FAN CLUTCH RADIATOR
291	FAN CLUTCH RADIATOR SPD 1
292	FAN CLUTCH RADIATOR SPD 2
417	DDEC III-LIMIT SPEED GOVERNOR
419	DDEC III-CHECK ENGINE LIGHT
439	DDEC III-12V IGNITION
440	DDEC III-12V IGNITION
505	DDEC III-TACHOMETER DRIVE
505	DDEC III-TACHOMETER DRIVE
509	DDEC III-STOP ENGINE LIGHT
510	DDEC III-FAST IDLE SIGNAL
524	DDEC III-ENGINE BRAKE DISABLE
525	DDEC III-FAST IDLE SIGNAL
528	DDEC III-STOP ENG. OVERRIDE
531	DDEC III-CRUISE CLUTCH CUT OUT
541	DDEC III-CRUISE SET SW
543	DDEC III-CRUISE STOP SW CUT OUT
544	DDEC III-CRUISE ON/OFF SW
545	DDEC III-CRUISE RESUME SW
555	DDEC III-CRUISE ANABLE LIGHT
556	DDEC III-VEHICLE SPEED (+)
557	DDEC III-VEHICLE SPEED (-)
565	DDEC III-ENGINE BRAKE ACTIVE
583	DDEC III-ENGINE BRAKE 4 CYL.
750	PRODRIVER-ILLUMINATION LTS
900	DDEC III-DATA LINK (+)
901	DDEC III-DATA LINK (-)
908	DDEC III-HYDRAULIC TRANSM. MODULATOR
916	DDEC III-SENSOR SUPPLY (5VDC)
952	DDEC III-SENSOR RETURN
953	DDEC III-BATTERY GRD
953C	DDEC III-BATTERY GRD
979	DDEC III-ENGINE BRAKE 2 CYL.
A	LEVEL-LOW SYSTEM
A	A/C & HEAT SYSTEM-HI PRES.
A1	A/C & HEAT SYSTEM-LO PRES.
A2	INTERIOR LTS-DRIVER'S LTS
B	LEVEL-LOW SYSTEM
B00	RR JCT BOX CPT BATT GRD
B000	RR JCT BOX CPT BATT GRD
C	LEVEL-LOW SYSTEM
J4	A/C & HEAT SYSTEM-DRIVER'S HTR
O3	A/C & HEAT SYSTEM-DRIVER'S HTR
R1	A/C & HEAT SYSTEM-DRIVER'S HTR
R6	A/C & HEAT SYSTEM-DRIVER'S HTR
SH1	SHIELD WIRE GRD
SH2	SHIELD WIRE GRD
SH3	SHIELD WIRE GRD
V5	A/C & HEAT SYSTEM-DRIVER'S HTR
V7	A/C & HEAT SYSTEM-DRIVER'S HTR

CIRCUIT BREAKER CODE (CB)

NO.	PAGE	AMPERE	#PREVOST	LOCATION	FUNCTION
CB1	1	200A	560838	ENGINE CPT	A/C FULL AIR
CB2	1	30A	870630	ENGINE CPT	12V HOT WIRE RR JCT BOX
CB3	1	70A	561767	ENGINE CPT	12V FEED RR JCT BOX
CB4	1	90A	560298	ENGINE CPT	12V FEED FR JCT BOX
CB5	1	30A	870630	ENGINE CPT	24V HOT WIRE RR JCT BOX
CB6	1	90A	560298	ENGINE CPT	24V FEED RR JCT BOX
CB7	1	90A	560298	ENGINE CPT	24V FEED FR JCT BOX
CB8	13	120A	562397	A/C JCT BOX	CONDENSER FAN MOTOR
CB9	13	105A	560465	A/C JCT BOX	EVAPORATOR FAN MOTOR
CB10	2	8A	561791	FR JCT BOX	MASTER SWITCH
CB16	2	8A	561791	RR JCT BOX	ENGINE-RR CTR & START SW
CB18	2	8A	561791	RR JCT BOX	ENGINE-FR CTR SW
CB19	3	15A	561793	RR JCT BOX	DDEC III E.C.M. POWER
CB20	3	15A	561793	RR JCT BOX	DDEC III E.C.M. POWER
CB21	3	6A	561790	RR JCT BOX	DDEC III 12V IGNITION
CB26	8	10A	561792	FR JCT BOX	BACK-UP LTS
CB27	5	8A	561791	FR JCT BOX	24V IGN DASH ACCESSORIES
CB29	5	20A	561794	FR JCT BOX	ELECTRICAL HORNS
CB30	5	15A	561793	FR JCT BOX	FIRE ALARM & WATER HTR TIMER
CB31	5	8A	561791	FR JCT BOX	AIR DRYER
CB35	6	6A	561790	FR JCT BOX	FOG & HAZARD SW
CB36	6	15A	561793	FR JCT BOX	FOG LTS
CB37	6	8A	561791	FR JCT BOX	HEAD & MULTI-FUNC. SW
CB38	6	10A	561792	FR JCT BOX	MARKER LTS
CB39	16	6A	561790	FR JCT BOX	TACHO & SPEEDO
CB40	6	8A	561791	FR JCT BOX	FR & RR CLEARANCE & ID. LTS
CB42	6	10A	561792	FR JCT BOX	RR MARKER.TAIL.LICENCE LTS
CB43	6	20A	561794	FR JCT BOX	HEADLAMP (HI)
CB44	6	15A	561793	FR JCT BOX	HEADLAMP (LO)
CB45	7	10A	561792	FR JCT BOX	MULTI-FUNC. SW (WIPER CTR)
CB47	7	15A	561793	FR JCT BOX	CORNERING LTS
CB48	8	6A	561790	FR JCT BOX	STOP SW
CB49	8	15A	561793	RR JCT BOX	LH STOP LTS
CB51	8	20A	561794	FR JCT BOX	RH STOP & CYCLOP LTS
CB52	9	15A	561793	FR JCT BOX	LUGGAGE LTS
CB55	10	8A	561791	FR JCT BOX	DASH LTS RHEOSTAT
CB59	10	8A	561791	FR JCT BOX	DRIVER'S LTS SW.
CB70	12-13	8A	561791	FR JCT BOX	BLOWER CUT-IN RELAY
CB72	12	10A	561792	RR JCT BOX	A/C COMPRESSOR CLUTCH
CB73	12	15A	561793	FR JCT BOX	WATER PUMP (A/C STANDARD)
CB73	13	15A	561793	FR JCT BOX	WATER PUMP (A/C FULL AIR)
CB79	12-13	10A	561792	FR JCT BOX	DRIVER'S HTR FAN
CB83	4	20A	561794	RR JCT BOX	WORLD TRANSMISSION VIM POWER
CB91	15	8A	561791	FR JCT BOX	DRIVER'S SEAT HEATER
CB92	16	6A	561790	FR JCT BOX	SPEED SW & LEVEL-LOW
CB104	17	6A	561790	FR JCT BOX	ABS E.C.U.
CB105	17	20A	561794	FR JCT BOX	ABS E.C.U.
CB106	17	10A	561792	FR SERV JCT BOX	ABS E.C.U.
CB107	17	10A	561792	FR SERV JCT BOX	ABS E.C.U.
CB117	14	8A	561791	FR JCT BOX	RR VIEW MIRROR
CB118	16	20A	561794	FR JCT BOX	LUGGAGE DOOR LOCK MOTOR
CB119	16	3A	561797	FR JCT BOX	LUGGAGE UNLOCK TT LT & SW
CB120	16	20A	561794	FR JCT BOX	LUGGAGE DOOR LOCK MOTOR
CB121	14	10A	561792	FR JCT BOX	CIGAR LIGHTER
CB122	11	6A	561790	FR JCT BOX	ENTRANCE DOOR AIR LOCK
CB125	7	20A	561794	FR JCT BOX	DIRECTIONAL LTS LH
CB126	7	20A	561794	FR JCT BOX	DIRECTIONAL LTS RH

CIRCUIT BREAKER CODE (CB)

Page F : 1

NO.	PAGE	AMPERE	#PREVOST	LOCATION	FUNCTION
CB127	15	25A	561795	FR JCT BOX	ELECTRIC DRIVER'S SEAT
CB129	18	15A	561793	RR JCT BOX	WATER HEATER
CB130	5	6A	561790	RR JCT BOX	FAN CLUTCH RADIATOR
CB132	18	15A	561793	RR JCT BOX	WATER HEATER WEBASTO
CB138	20	3A	561797	FR JCT BOX	SUN VISOR

No.	LOCATION	TYPE	(NB) CAVITY	#PIN HOUSING	#SOCKET HOUSING	
C3	UNDER DASH-LH	AMP CPC	37	561645	561646	
C7	FR SERVICE COMPT.-CLUTCH SW	ITT SS	3	561111	561080	
C11	LH CONSOLE SW-MIRROR	AMP MNL	3	561667	561550	
C12	LH CONSOLE SW-MIRROR HTR	AMP MNL	2	561248	561247	
C13	LH CONSOLE SW-MIRROR	AMP MNL	6	561552	561515	
C14	UNDER DASH LH-MIRROR	AMP MNL	9	561670	561669	
C15	UNDER DASH RH-MIRROR	AMP MNL	9	561670	561669	
C18	UNDER DASH-FIRE ALARM	TC	2	561030	560997	PRIOR S571
C18	UNDER DASH-FIRE ALARM	AMP MNL	2	560900	560898	EFF. S571
C19	UNDER DASH-A/C & HEAT SYST.	TC	10	561072	561110	
C21	LUGGAGE COMPT.-LOCK DOOR MOT.	PED	2	------	562076	
C22	ENGINE COMPT.-CYCLOP LT	PED WP	2	561566	561690	
C23	FR SERVICE COMPT.-WTR PUMP	PED WP	2	561566	561690	
C26	UNDER INSTRUMENT.-PANEL RHEO.	TC	2	561030	560997	
C28	FR SERVICE COMPT.-SEAT HTR	AMP MNL	2	560900	560898	
C29	FR SERVICE COMPT.-VIM FEED	PED WP	3	561781	561782	
C30	FR SERVICE COMPT.-SEAT ELECT.	PED WP	2	562397	------	
C32	RH CONSOLE-DRV TEMP SENSOR	BURNDY	3	------	561104	
C33	ENGINE DDEC II-SPARE GOV.	PED WP	2	561566	561690	
C34	RH CONSOLE-DRV TEMP CTRL	BURNDY	6	------	561103	
C35	RECIRULATED AIR GRIL.-SENSER	BURNDY	3	------	561104	
C36	LH CONSOLE SW-CRUISE ON/OFF	SWF	8	------	561107	
C37	LH CONSOLE SW-CRUISE SET	SWF	8	------	561107	
C38	LH CONSOLE SW-CRUISE RESUME	SWF	8	------	561107	
C41	UNDER DASH-FLASHER UNIT	TC	2	------	561940	
C49	FR JCT PANEL-PARK BRK ALARM	AMP MNL	2	560900	560898	
C50	RH CONSOLE-PAS. TEMP CTRL	BURNDY	6	------	561103	
C51	RH CONSOLE SW-A/C & HEAT	SWF	8	------	561107	
C52	ENGINE COMPT.-COMPRESSOR 05G	PED WP	2	561566	561690	
C53	ENGINE COMPT.-COMPRESSOR 05G	PED WP	2	561566	561690	
C54	ENGINE COMPT.-COMPRESSOR 05G	TC	1	560098	560697	
C55	CENTRAL DOOR	PED WP	2	561566	561690	
C61	ENGINE COMPT.-FUEL FILTER	PED WP	2	561566	561690	
C62	ENGINE COMPT.-COMPRESSOR STD	PED WP	2	561566	561690	
C63	ENGINE COMPT.-COMPRESSOR STD	PED WP	2	561566	561690	
C64	ENGINE COMPT.-COMPRESSOR STD	TC	1	560098	560697	
C70	FR JCT PANEL-DOCKING LTS	TC	1	560098	560697	
C73	LH SW PANEL-MULTI FUNC. LEV.	AMP FF	8	561188	------	
C74	LH SW PANEL-MULTI FUNC. LEV.	AMP FF	6	------	561108	
C77	UNDER DASH-3 WAY SW	TC	2	561030	560997	
C78	LUGGAGE COMPT.-DOOR LOCK 4 LH	AMP MNL	4	560851	560852	
C79	LUGGAGE COMPT.-DOOR LOCK 4 RH	AMP MNL	4	560851	560852	
C80	FR JCT PANEL-LUG. DOOR LOCK	AMP MNL	6	561552	561515	
C81	LUGGAGE COMPT.-DOOR LOCK 1 LH	AMP MNL	4	560851	560852	
C82	LUGGAGE COMPT.-DOOR LOCK 1 RH	AMP MNL	4	560851	560852	
C83	UNDER DASH-FLASHER MODULE	TC	10	561072	561110	
C84	UNDER DASH-A/C SYSTEM	TC	3	561091	561071	
C85	LUGGAGE COMPT.-DOOR LOCK 3 RH	AMP MNL	4	560851	560852	
C86	LUGGAGE COMPT.-DOOR LOCK 3 LH	AMP MNL	4	560851	560852	
C88	RR END ROOF-CLEARANCE LTS	AMP MNL	2	560900	560898	
C98	A/C JCT BOX	ITT SS	4	561998	561999	
C99	A/C JCT BOX	ITT SS	3	561111	561080	
C100	A/C JCT BOX	ITT SS	2	561813	561812	
C101	CONDENSER COMPT.-A/C PRES. SW	PED WP	2	561566	561690	
C105	UNDER DASH RH-DRV LIQ SOL VL	TC	2	561030	560997	
C106	UNDER DASH RH-DRV WTR VALVE	TC	2	561030	560997	
C107	UNDER DASH RH-DRV HTR RH FAN	TC	2	561030	560997	
C108	UNDER DASH RH-DRV HTR LH FAN	TC	2	561030	560997	

CONNECTORS CODE (C) Page G : 1

No.	LOCATION	TYPE	(NB) CAVITY	#PIN HOUSING	#SOCKET HOUSING
C109	RH CONSOLE SW-A/C CLUTCH SW	SWF	8	------	561107
C114	ENGINE DDEC II-SPEED SIGNAL	PED WP	2	561566	561590
C115	RR JCT BOX	DEUTSCH	40	562281	562284
C116	DRIVE AXLE COMPT.-AIR DRYER	PED WP	2	------	562251
C119	ENGINE COMPT.-LH LOWER LAMP	PED WP	6	561605	561607
C120	ENGINE COMPT.-LH LOWER LAMP	PED WP	6	561605	561607
C127	FR SERVICE COMPT.-JACOB	PED WP	4	561616	561783
C131	LH CONSOLE SW-LUG.DOOR LOCK	SWF	8	------	561107
C132	LH CONSOLE SW-DRIVER'S LTS	SWF	8	------	561107
C133	LH CONS.SW-JACOB OR RETARDER	SWF	8	------	561107
C135	LH SW PANEL-ETHER	SWF	8	------	561107
C136	LH CONSOLE SW-MIRROR HTR	SWF	8	------	561107
C137	RH SW PANEL-HEAD LAMP	SWF	8	------	561107
C138	RH SW PANEL-SPARE	SWF	8	------	561107
C139	RH SW PANEL-FOG LAMP	SWF	8	------	561107
C140	FR JCT PANEL-BAT. HI/LO	AMP MNL	2	560900	560898
C141	ENGINE COMPT.-B/UP ALARM	PED WP	2	561566	561590
C142	FR SERVICE CPT-LH MARKER LTS	ITT SS	3	561111	561080
C146	FR SERVICE CPT-RH MARKER LTS	ITT SS	3	561111	561080
C154	RH SW PANEL-HAZARD	SWF	8	------	561107
C155	LH SW PANEL-FAST IDLE	SWF	8	------	561107
C156	LH SW PANEL-STP ENG. OVER.	SWF	8	------	561107
C157	RH SW PANEL-ENTRANCE DOOR LCK	SWF	8	------	561107
C160	FR SERVICE CPT-INTERFACE	AMP CPC	37	561644	561646
C161	ENGINE DDEC III-ECM	PED	30	------	561600
C162	ENGINE DDEC III-ACCESSORIES	PED WP	4	561610	561611
C163	ENGINE CPT-COOLANT PROBE	PED WP	2	------	562350
C164	FR SERVICE JCT BOX	AMP CPC	22	561709	561710
C165	FR SERVICE JCT BOX	AMP CPC	16	561693	561695
C166	UNDER INSTRUMENT PANEL	AMP CPC	16	561639	561640
C167	FR SERVICE CPT-EL. FOOT PEDAL	PED WP	3	561781	561782
C168	FR SERVICE CPT-DDR	DEUTSCH	6	562360	------
C169	FR SERVICE CPT-WORLD TR. VIW	AMP CPC	16	561638	561640
C175	FR SERVICE COMPT.-LEVEL LO	PED WP	3	561781	561782
C180	FR JCT PANEL-DIODES	MOLEX	10	------	561251
C181	FR SERVICE CPT-LEVEL LOW	AMP MNL	6	561552	561515
C182	FR SERVICE CPT-SPEED SW	AMP HDP	15	------	562012
C187	FR SERVICE JCT BOX-RESISTORS	AMP MNL	6	561552	561515
C190	FR SERVICE CPT.-WORLD TR VIW	PED WP	30	------	561600
C199	FR SERV. JCT BOX-SERVICE BRK	AMP MNL	3	561667	561550
C201	UNDER INSTRUMENT PANEL	AMP MNL	2	560900	560898
C202	UNDER INSTRUMENT PANEL	AMP CPC	9	561636	561637
C206	RH CONSOLE-FR DEFROSTER	TC	2	561030	560997
C207	RH CONSOLE-DRV RHEOSTAT	AMP MNL	6	561552	561515
C208	UNDER DASH-DRV HTR MODULE	AMP MNL	9	561670	561669
C209	UNDER DASH-DRV HTR MODULE	AMP MNL	9	561670	561669
C213	FR ROOF-CLEARANCE LT	AMP MNL	2	560900	560898
C230	ENG.CPT.- FUEL PRIME PUMP SW.	PED WP	2	561566	561690
C231	ENG.CPT.- FUEL PRIME PUMP	PED WP	2	561566	561690
C234	UNDER INSTRUMENT PANEL-VDO	AMP MNL	4	560851	560852
C235	UNDER INSTRUMENT PANEL-VDO	AMP MNL	4	560851	560852
C236	FR SERVICE CPT CENTER-ABS	AMP CPC	14	561585	561583
C237	FR AXLE CPT-ABS RH SENSOR	WABCO	2	641132	------
C238	FR AXLE CPT-ABS RH VALVE	WABCO	3	------	641098
C239	FR AXLE CPT-ABS LH VALVE	WABCO	3	------	641098
C240	FR AXLE CPT-ABS LH SENSOR	WABCO	2	641132	------

No.	LOCATION	TYPE	(NB) CAVITY	#PIN HOUSING	#SOCKET HOUSING	
C241	DRIVE AXLE CPT-ABS	PED WP	6	561606	561607	
C242	DRIVE AXLE CPT-ABS LH SENSOR	WABCO	2	641132	------	PRIOR S571
C242	DRIVE AXLE CPT-ABS LH SENSOR	DEUTSCH	2	562486	562485	EFF. W/S571
C243	DRIVE AXLE CPT-ABS LH VALVE	WABCO	3	------	641098	
C244	DRIVE AXLE CPT-ABS RH VALVE	WABCO	3	------	641098	
C245	DRIVE AXLE CPT-ABS RH SENSOR	WABCO	2	641132	------	PRIOR S571
C245	DRIVE AXLE CPT-ABS RH SENSOR	DEUTSCH	2	562486	562485	EFF. W/S571
C246	DRIVE AXLE CPT-ABS SPARE	PED WP	4	561610	561611	
C247	FR SERVICE CPT-ABS MODULE	WABCO	35	------	561094	
C248	DRIVE AXLE CPT-ABS	PED WP	6	561606	561607	
C249	FR SERVICE CPT-ABS/DDEC	PED WP	2	561566	561690	
C250	RH SW PANEL-B/UP CANCEL	SWF	8	------	561107	
C251	RH SW PANEL-SEAT HTR	SWF	8	------	561107	
C252	LH SW PANEL-SWITCH LT	SWF	2	------	561837	
C253	LUGGAGE COMPT.-WINDOW AJAR	MOLEX	4	561477	561476	
C254	FR SERVICE JCT BOX-ABS	AMP CPC	16	561693	561695	
C257	ENGINE COMPT-WATER HEATER	AMP FF	6	------	561186	
C258	LH CONSOLE-WATER HTR TIMER	AMP FF	8	561188	562363	
C259	ENGINE COMPT-WATER HEATER	TC	2	561597	------	
C260	ENGINE COMPT-WATER HEATER	TC	1	561073	------	
C261	ENGINE COMPT-WATER HEATER	TC	2	561597	------	
C266	LUGGAGE COMPT. LTS	AMP MNL	2	561248	561247	
C267	LUGGAGE COMPT. LTS	AMP MNL	2	561248	561247	
C268	LUGGAGE COMPT. LTS	AMP MNL	2	561248	561247	
C269	LUGGAGE COMPT. LTS	AMP MNL	2	561248	561247	
C270	LUGGAGE COMPT. LTS	AMP MNL	2	561248	561247	
C271	LUGGAGE COMPT. LTS	AMP MNL	2	561248	561247	
C272	FR SERVICE CPT LTS	AMP MNL	2	561248	561247	
C273	LH CONSOLE SW-UNLOAD TAG	SWF	8	------	561107	
C274	FR JCT PANEL-DIODES	AMP MNL	15	561987	561986	
C275	FR JCT PANEL-DIODES	AMP MNL	15	561987	561986	
C276	FR JCT PANEL-ALARM BUZZER	BOSCH	5	------	561183	
C280	ENGINE COMPT-COMPRESSOR STD	PED WP	2	561566	561690	
C290	LUGGAGE CPT-DOOR LOCK	AMP MNL	4	560851	560852	
C291	LUGGAGE CPT-DOOR LOCK	AMP MNL	4	560851	560852	
C292	LUGGAGE CPT-DOOR LOCK	AMP MNL	4	560851	560852	
C293	WIPER MOTOR	AMP FF	6	------	561186	
C294	UNDER DASH-WIPER SYST. FEED	AMP MNL	6	561552	561515	
C295	UNDER DASH-WIPER PULSE GEN.	AMP FF	6	------	561186	
C296	FR SERVICE CPT-HEAD LTS	ITT SS	3	561111	561080	
C302	UNDER DASH-FLASHER MODULE	AMP MNL	2	560900	560898	
C303	RR JCT BOX-DIODES	AMP MNL	15	561987	561986	
C304	ENGINE COMPT-RETARDER VALVE	AMPHENOL	2	------	560412	
C309	ENGINE DDEC III-ECM POWER	PED WP	5	------	562345	
C312	ENGINE DDEC III-ACCESSORIES	PED WP	2	561566	561690	
C313	ENGINE DDEC III-INPUT	PED WP	3	562398	------	
C314	FR.ROOF - RH SUN VISOR	AMP MNL	2	560900	560898	
C315	FR.ROOF - LH SUN VISOR	AMP MNL	2	560900	560898	
C316	FR JCT PANEL - SUN VISOR	AMP MNL	4	560851	560852	
C317	RH CONSOLE - LH SUN VISOR SW.	SWF	8	------	561107	
C318	RH CONSOLE - RH SUN VISOR SW.	SWF	8	------	561107	
C326	ENGINE DDEC III- HYDR. TR.	PED WP	4	561610	561611	
C381	ENGINE S60 AIR TEMP SW	PED WP	2	561566	561690	
C382	ENGINE GENERATOR 12 VAC RLY	PED WP	1	561605	561577	

CONNECTORS CODE (C) Page G : 2

No.	LOCATION	TYPE	(NB) CAVITY	#PIN HOUSING	#SOCKET HOUSING
C426	ENGINE S60 RAD. FAN CLUTCH	PED WP	3	561781	561782
C427	ENGINE S60 TEMP SENSOR	BEHR	3	------	562310
C428	RH CONSOLE-RHEOSTAT A/C (F A)	AMP MNL	3	561667	561550
C500	FR.JCT PANEL-PRODRIVER	MOLEX	6	562070	562069
C501	RH CONSOLE-PRODRIVVER	PED	7	562433	------

NO.	PAGE	AMP	#PREVOST	LOCATION	FUNCTION
D1	5	3A	561740	FR JCT BOX	PRIMARY LO-AIR SONALERT
D2	5	3A	561740	FR JCT BOX	SECONDARY LO-AIR SONALERT
D3	12-13	3A	063849	FR JCT BOX	A/C (FULL AIR) - CONTROL SW.
D4	12-13	3A	063849	FR JCT BOX	WATER HEATER ON SIGNAL
D17	7	3A	561740	FR JCT BOX	HAZARD LH
D18	7	3A	561740	FR JCT BOX	HAZARD RH
D19	6	3A	561740	FR JCT BOX	DAYTIME RUNNING LTS
D20	6	3A	561740	FR JCT BOX	DAYTIME RUNNING LTS
D21	7	3A	561740	UNDER DASH	AUDIBLE FLASHER RLY LH
D22	7	3A	561740	UNDER DASH	AUDIBLE FLASHER RLY RH
D23	18	3A	063763	RR JCT BOX	PRE WATER HEATER (ESPAR PRIOR)
D60	12	3A	561740	RR JCT BOX	A/C STD - COMPR. CLUTCH

DIODE CODE (D) Page H : 1

NO.	PAGE	AMP	#PREVOST	LOCATION	FUNCTION

NO.	PAGE	COIL V	#PREVOST	LOCATION	FUNCTION
R1	2	24V	561991	FR JCT BOX	ENGINE RUN (24) FR
R2	2	24V	561991	FR JCT BOX	ENGINE RUN (12) FR
R3	1	24V	561707	RR JCT BOX	FIELD RELAY
R4	1	24V	561005	RR JCT BOX	STARTING MOTOR
R9	8	24V	561707	RR JCT BOX	BACK-UP LTS
R12	5	12V	562092	FR JCT BOX	ELECTRICAL HORNS
R13	6	24V	561707	FR JCT BOX	FOG LTS - 12V
R14	6	24V	561707	FR JCT BOX	NIGHT'S BLINKER
R15	6	24V	561707	FR JCT BOX	FR MARKER LTS
R16	6	24V	561707	FR JCT BOX	IDENT. & CLEARANCE LTS
R17	6	24V	561707	RR JCT BOX	TAIL.LICENCE.MARKER-RR LTS
R18	6	24V	561707	FR JCT BOX	DAYTIME RUN LTS-CANCEL
R19	6	24V	561707	FR JCT BOX	HI-BEAM
R20	6	24V	561707	FR JCT BOX	LO-BEAM
R22	3	24V	561707	FR SERV JCT BOX	DDEC III FAST IDLE SIGNAL
R23	3	24V	561707	RR JCT BOX	DDEC III 12V IGNITION
R24	4	24V	561707	RR JCT BOX	WORLD TRANSMISSION 12V IGN.
R25	3	24V	561707	FR SERV JCT BOX	BRAKE SW-DDEC CRUISE CTR
R26	8	24V	561707	RR JCT BOX	STOP LTS
R31	13	24V	561707	FR JCT BOX	A/C FULL AIR WATER HTR - WATER VALVE
R32	12	24V	560772	RR JCT BOX	COMPR. CLUTCH TIME DELAY ON
R33	12-13	12V	561538	FR JCT BOX	BLOWER CUT-IN
R34	13	24V	561707	RR JCT BOX	A/C WARNING LT
R35	12	24V	561707	FR JCT BOX	WATER PUMP A/C STD
R36	12	24V	561707	RR JCT BOX	A/C STD-COMPR. CLUTCH
R37	1	24V	561707	RR JCT BOX	GENERATOR-12VAC RLY SIGN
R38	13	24V	561005	A/C JCT BOX	EVAP. FAN MOTOR (FULL AIR)
R39	13	24V	561005	A/C JCT BOX	COND. FAN MOTOR (FULL AIR)
R40	13	24V	561707	A/C JCT BOX	WATER PUMP (FULL AIR)
R43	1	12V	560271	ENGINE COMPT	12V HOUSE
R46	7	24V	561707	UNDER INST PANEL	LH DIRECTIONNAL LTS
R47	7	24V	561707	UNDER INST PANEL	RH DIRECTIONNAL LTS
R49	17	24V	561707	FR SERV JCT BOX	ABS - SERVICE BRAKE RLY
R50	17	24V	561707	FR SERV JCT BOX	ABS - VR2 RLY
R51	17	24V	561707	FR SERV JCT BOX	ABS - WARNING RLY
R52	17	24V	561707	FR SERV JCT BOX	ABS - VR1 RLY
R53	2	24V	561991	RR JCT BOX	ENGINE RUN 24V RR
R54	2	24V	561991	RR JCT BOX	ENGINE RUN 12V RR
R56	15	24V	561707	FR SERV JCT BOX	ENGINE BRAKE SYSTEM
R57	6	24V	561707	FR JCT BOX	DAY'S BLINKER
R60	6	12V	561538	FR JCT BOX	DAYTIME RUN LTS
R62	7	24V	561707	BEHIND RH CONS	RH CORNERING
R63	7	24V	561707	BEHIND RH CONS	LH CORNERING
R68	11	24V	561707	FR JCT BOX	PARK BRAKE ALARM
R69	16	12V	562092	FR JCT BOX	LUGG DOOR LOCK
R70	16	12V	562092	FR JCT BOX	LUGG DOOR UNLOCK
R71	16	12V	562092	FR JCT BOX	LUGG DOOR LOCK TT LT
R72	10	24V	561707	FR JCT BOX	DASH LTS RHEOSTAT
R74	16	12V	562092	RR JCT BOX	LUGG DOOR LOCK
R75	16	12V	562092	RR JCT BOX	LUGG DOOR UNLOCK
R76	8	24V	561707	RR JCT BOX	STOP LTS-ENGINE BRK & RETARDER SYST.
R77	7	12V	562092	UNDER DASH	AUDIBLE FLASHER RLY
R78	5	24V	561707	RR JCT BOX	DDEC3 FAN CONTROL SPEED#1
R79	5	24V	561707	RR JCT BOX	DDEC3 FAN CONTROL SPEED#2
R80	15	24V	561707	FR SERV JCT BOX	ENGINE BRAKE SYS.- W/T CTR
R81	15	24V	561707	FR SERV JCT BOX	ENGINE BRAKE SYS.- W/T CTR
R82	15	24V	561707	FR SERV JCT BOX	RETARDER SYSTEM
R83	18	24V	561707	RR JCT BOX	WATER HEATER-WEBASTO
R84	12	24V	561707	RR JCT BOX	DDEC3 A/C STD FAN CONTROL

RELAYS CODE (R) Page I : 1

NO.	PAGE	COIL V	#PREVOST	LOCATION	FUNCTION

NO.	PAGE	OHM(S)	#PREVOST	LOCATION	FUNCTION
RS1	3	11 K	562307	FR SERV JCT BOX	DDEC III-FAST IDLE
RS2	3	3.6 K	562306	FR SERV JCT BOX	DDEC III-FAST IDLE
RS3	6	1 (2)	561537	FR SERV. COMPT.	FOG LT - RH
RS4	6	1 (2)	561537	FR SERV. COMPT.	FOG LT - LH
RS5	7	1 (2)	561537	LAMP ASM	CORNERING LT - LH
RS8	7	1 (2)	561537	LAMP ASM	CORNERING LT - RH
RS9	7	1 (2)	561537	LAMP ASM	DOCKING LT - RH
RS10	7	1 (2)	561537	LAMP ASM	DOCKING LT - LH
RS14	6	.82 (2)	560822	FR SERV. COMPT.	DAYTIME RUN LTS
RS15	12	470 K	560805	RR JCT BOX	COMPR CLUTCH TIME DELAY ON
RS17	5	220	562498	UNDER DASH	FIRE ALARM

RESISTOR CODE (RS) Page J : 1

NO.	PAGE	OHM(S)	#PREVOST	LOCATION	FUNCTION

WIRING DIAGRAM KEYS

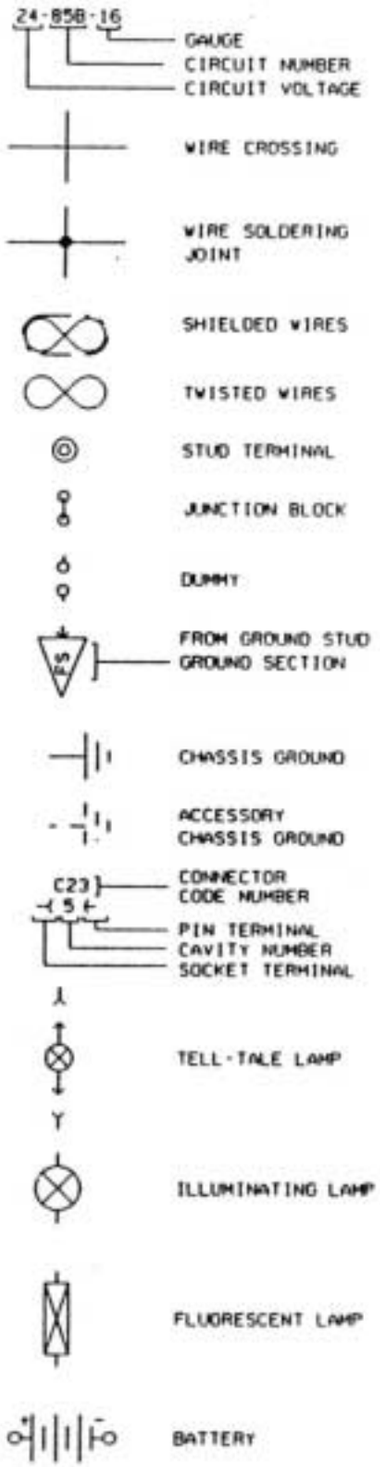

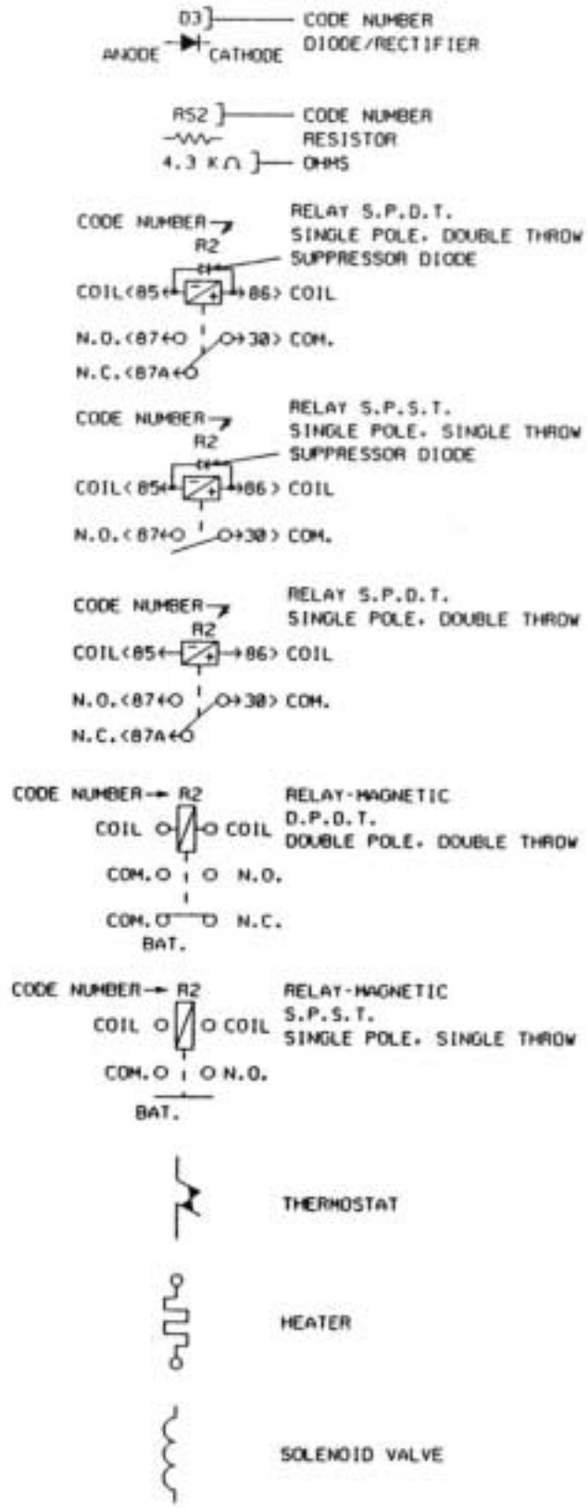

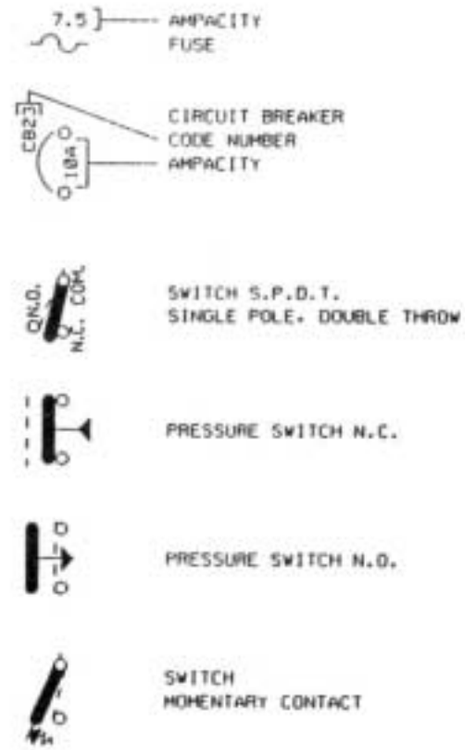

BLK	BLACK
YEL	YELLOW
RED	RED
WH	WHITE
GRY	GREY
ORA	ORANGE
BLU	BLUE
GRN	GREEN
BRN	BROWN
PUR	PURPLE
PK	PINK

RR. JCT BOX - JUNCTION BLOCK

FR. JCT PANEL - JUNCTION BLOCK

PREVOST CAR inc.	WIRING DIAGRAM	NO: D060815	REVISION DATE 94-04-14	P. K

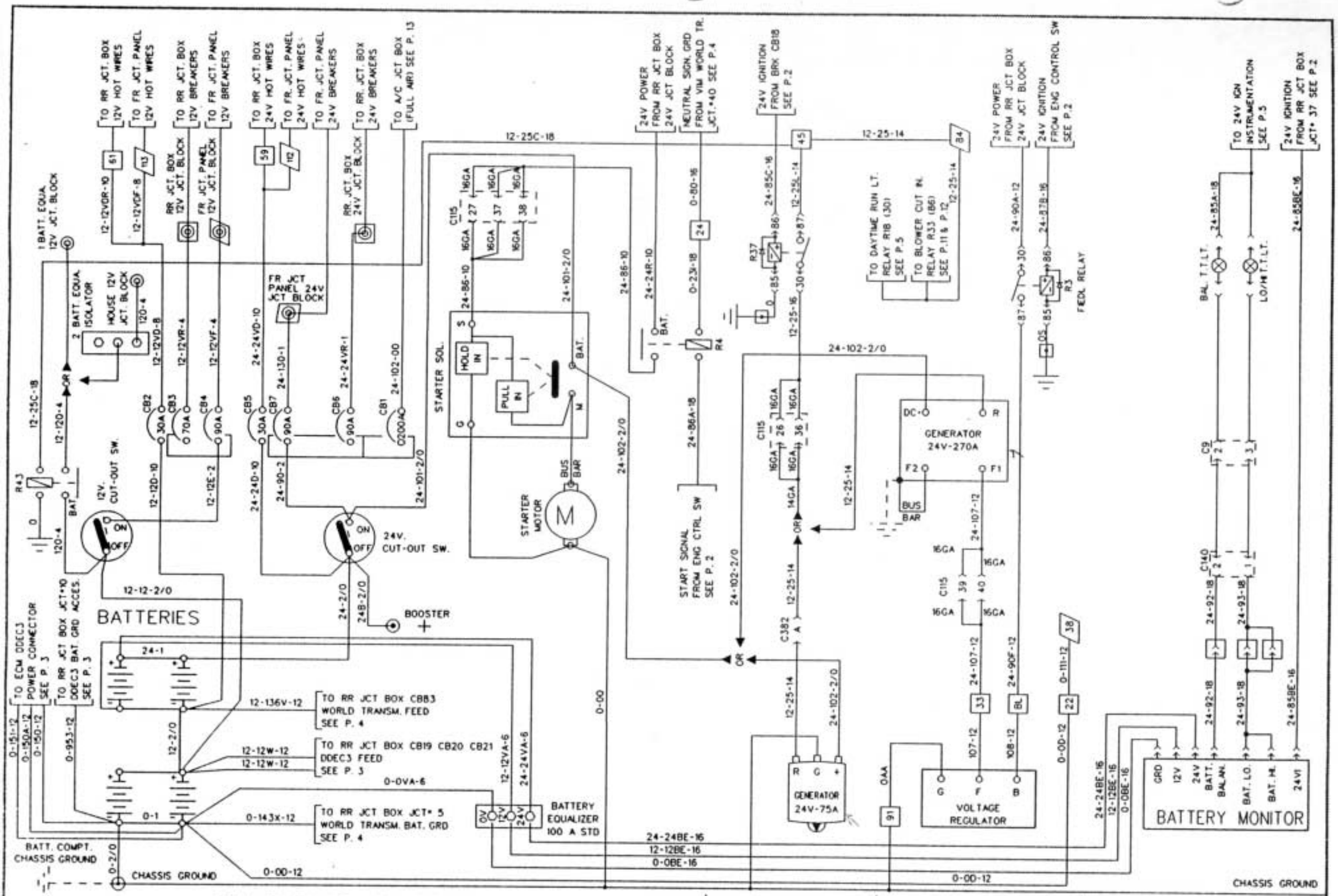

CHARGING SYSTEM | W/24V 75A | W/24V 270A |

PREVOST CAR inc.	WIRING DIAGRAM	NO: D060815	REVISION DATE 94-01-17	P. 1

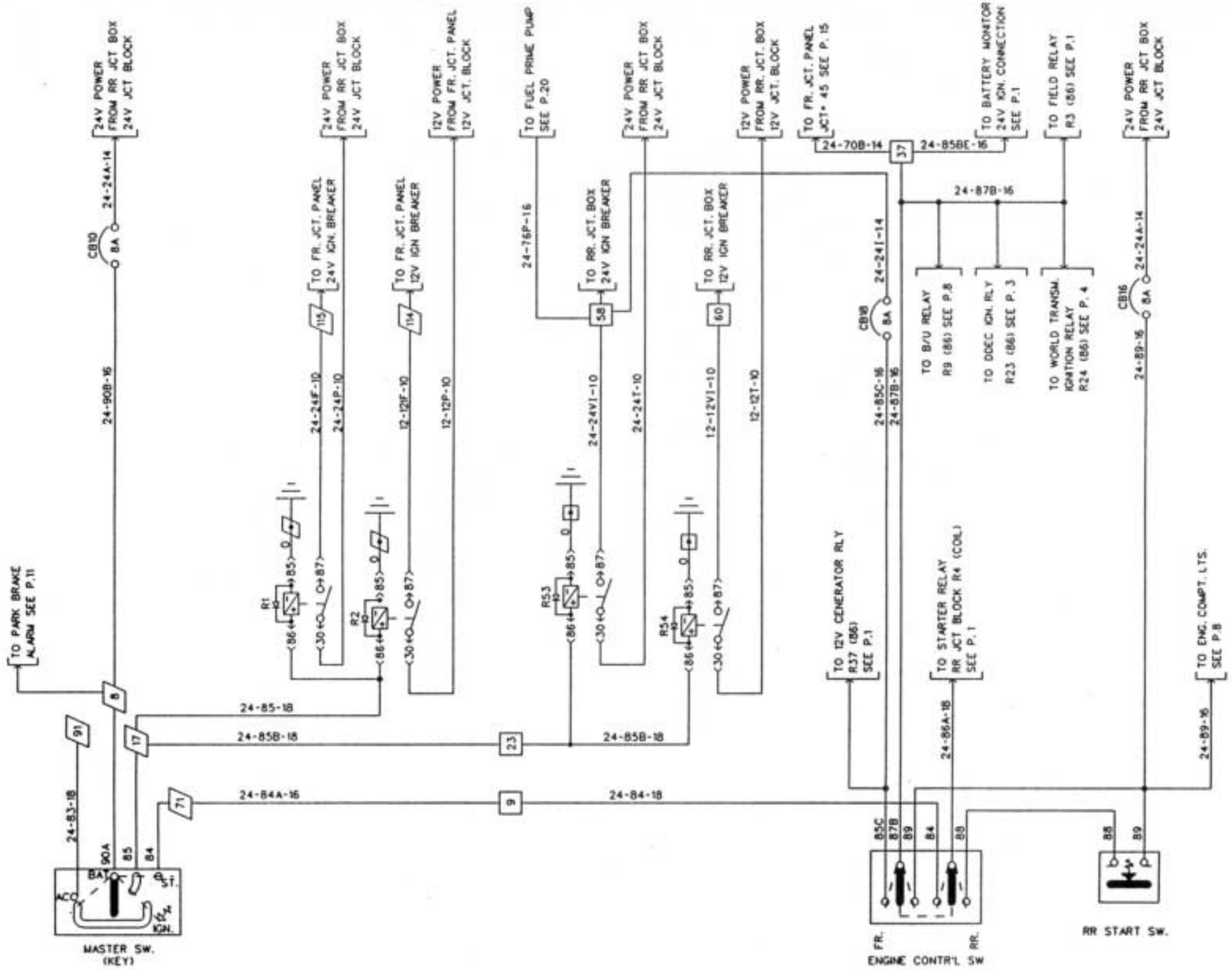

ENGINE CONTROL

PREVOST CAR inc.	WIRING DIAGRAM	NO: D060815	REVISION DATE 95-02-23	P. 2

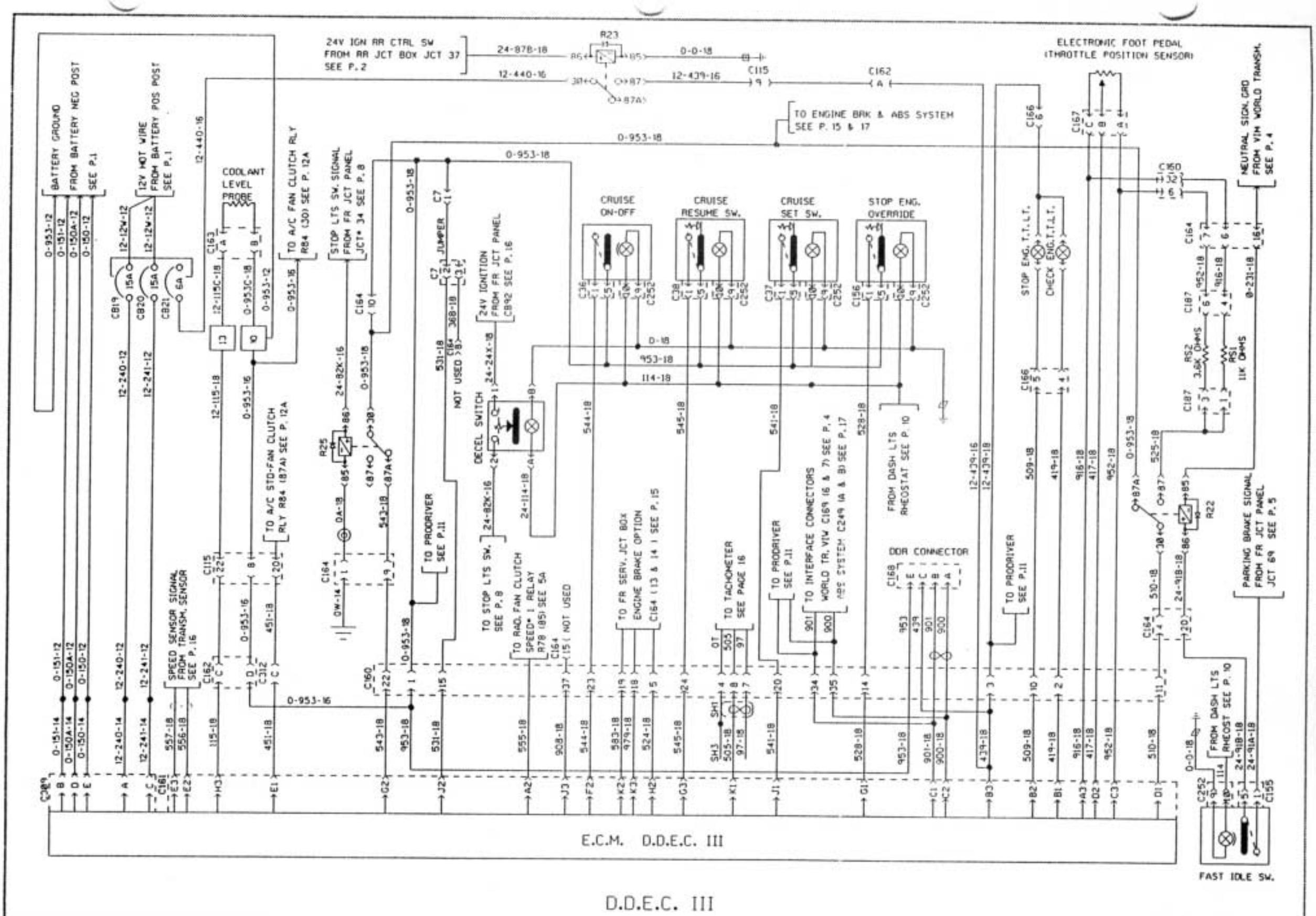

D.D.E.C. III

PREVOST CAR inc.	WIRING DIAGRAM	NO: D060815	REVISION DATE 94-05-19	P. 3a

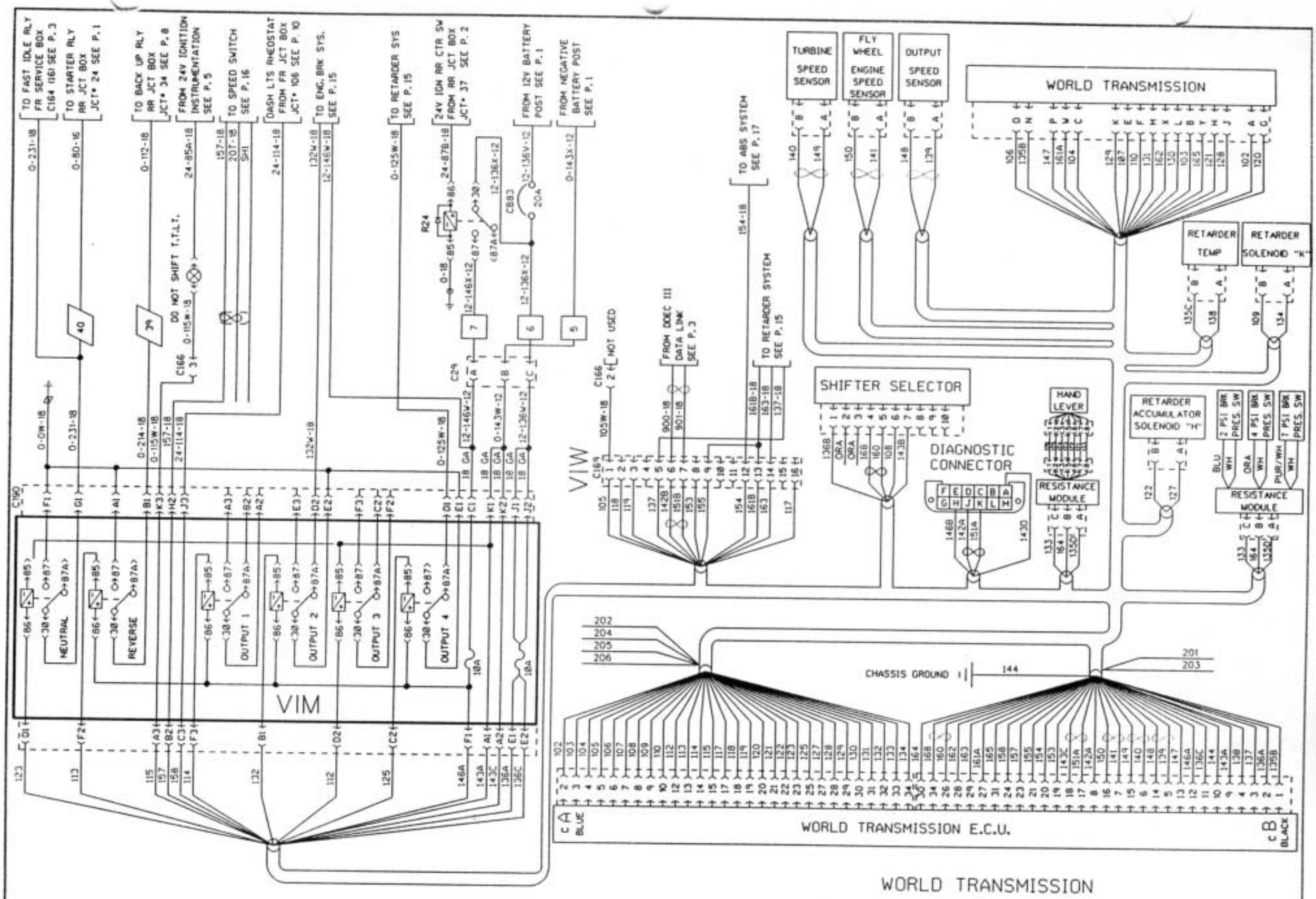

PREVOST CAR inc.	WIRING DIAGRAM	NO: D060815	REVISION DATE 94-09-14	P. 4a

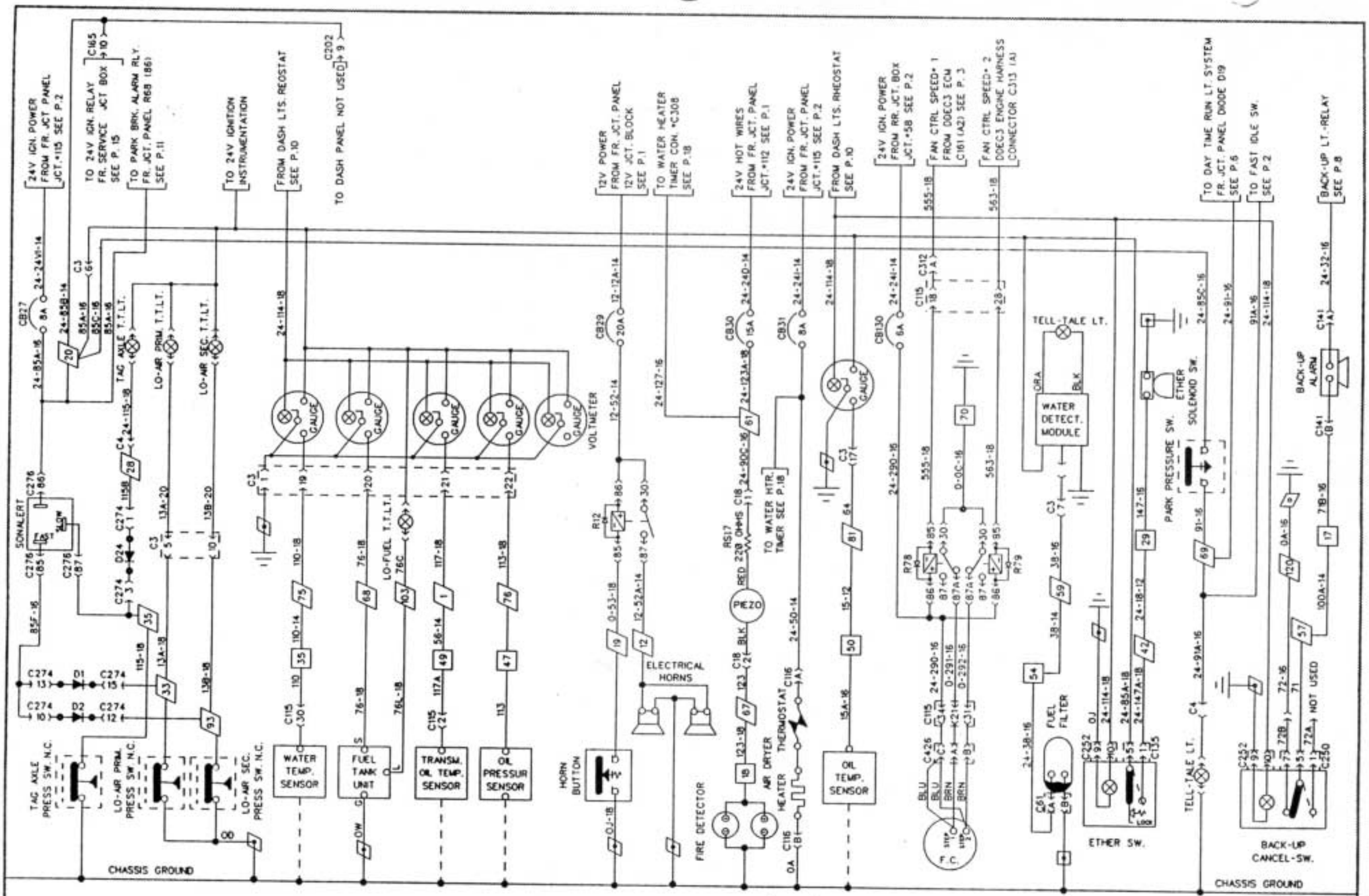

ALARM AND SIGNAL

AIR DRYER	DIFFERENTIAL OIL TEMP.	RADIATOR FAN CLUTCH	FUEL WATER FILTER	ETHER COLD START	PARKING BRAKE SW.	BACK-UP ALARM

PREVOST CAR inc.	WIRING DIAGRAM	NO: D060815	REVISION DATE 95-04-28	P. 5b

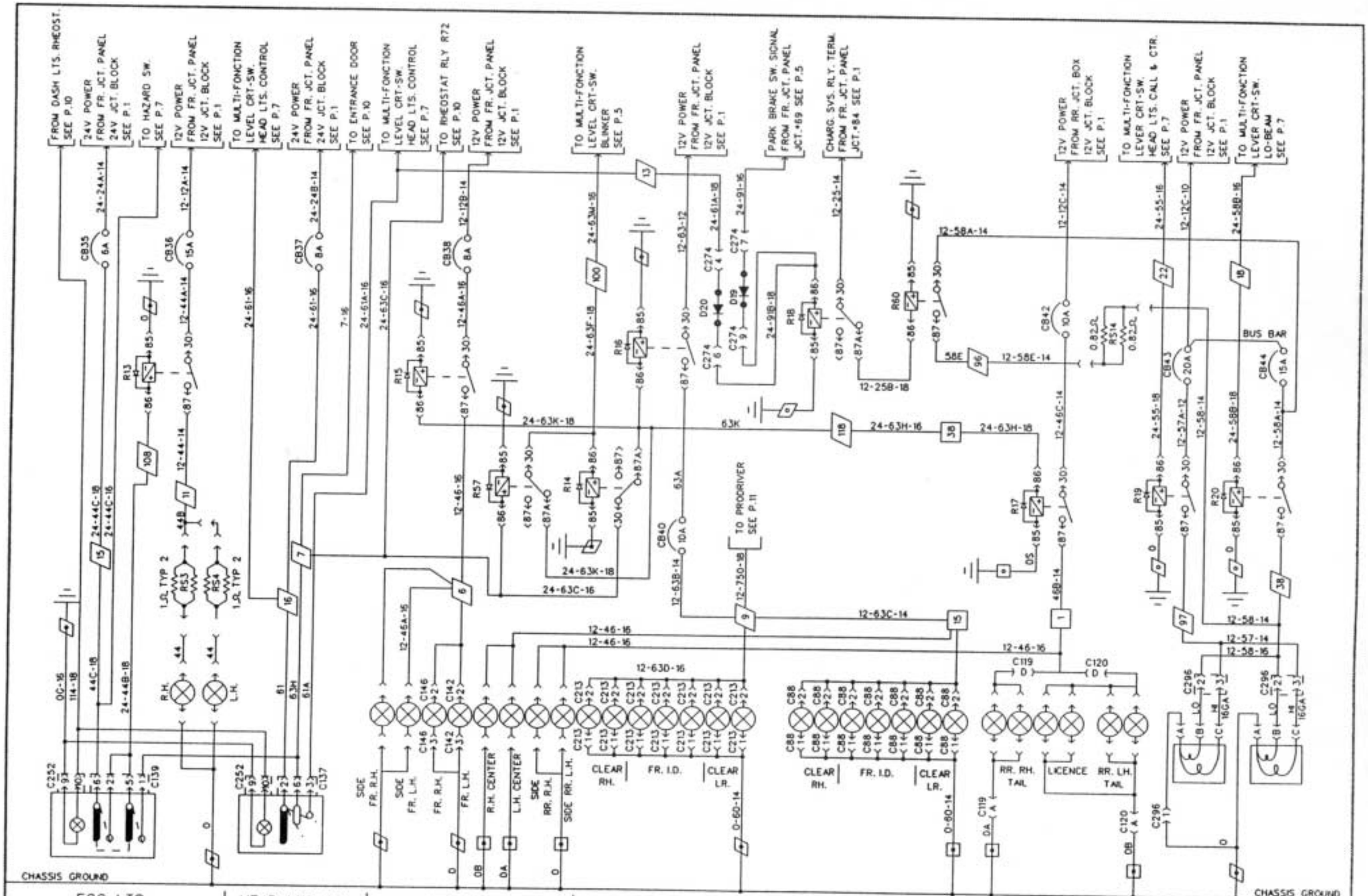

EXTERIOR LIGHTING

PREVOST CAR inc.	WIRING DIAGRAM	NO: D060815	REVISION DATE 95-02-23	P. 6

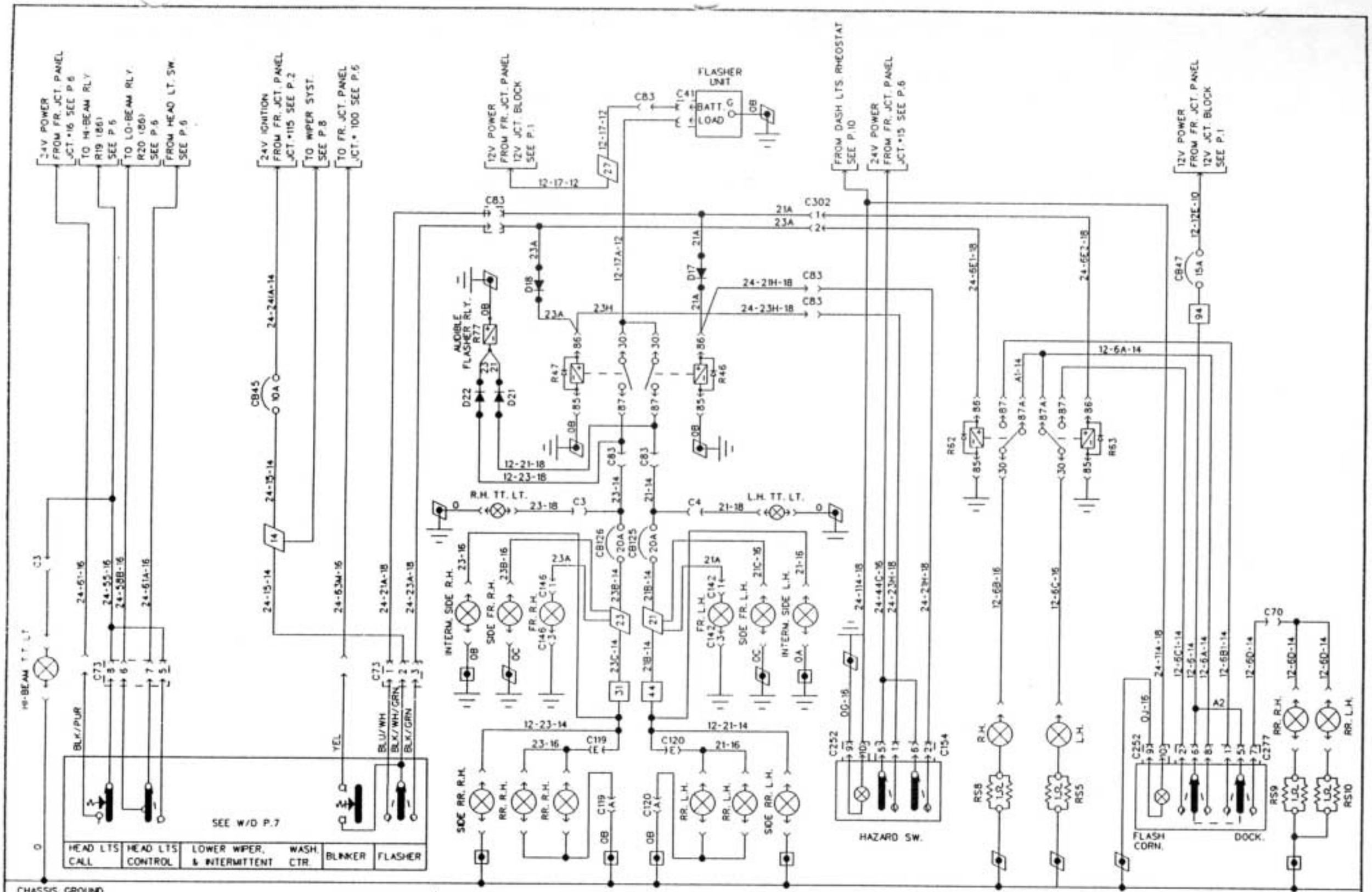

EXTERIOR LIGHTING

PREVOST CAR inc.	WIRING DIAGRAM	NO: D060815	REVISION DATE 94-04-14	P. 7

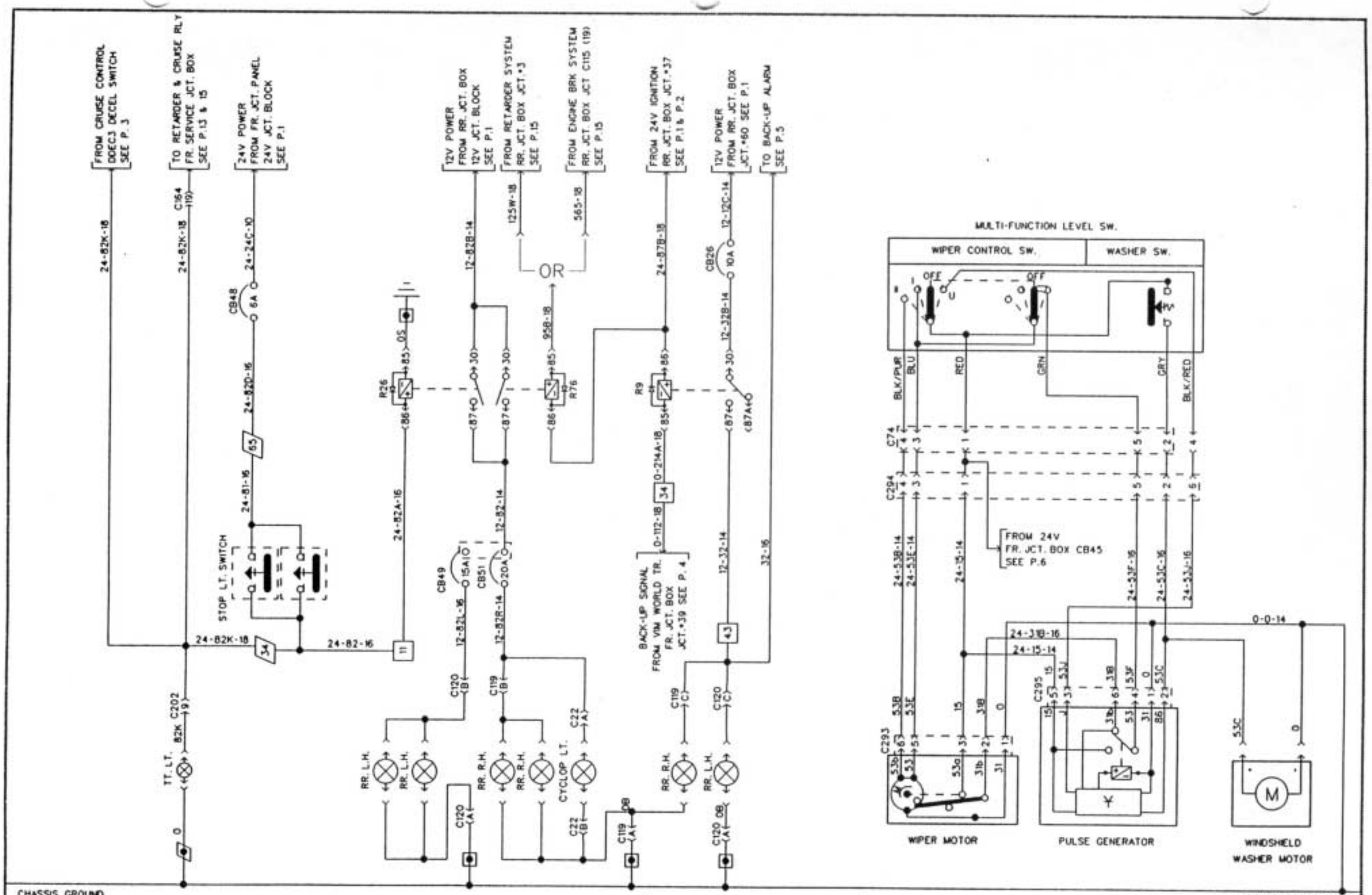

STOP LIGHTS | BACK-UP LIGHTS | WINDSHIELD WIPER AND WASHER

EXTERIOR LIGHTING

PREVOST CAR inc.	WIRING DIAGRAM	NO: D060815	REVISION DATE 94-01-17	P. 8

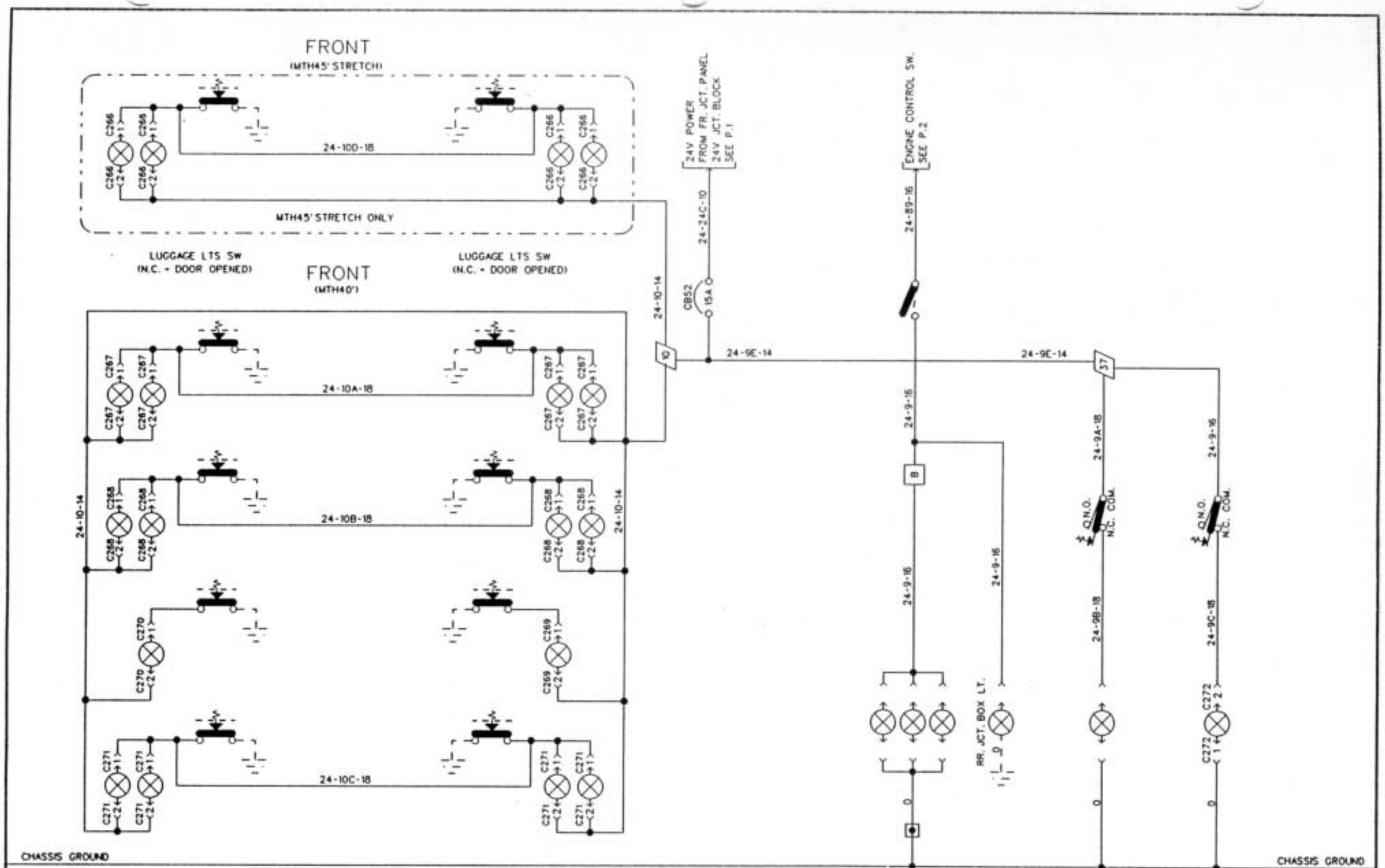

INTERIOR LIGHTING

PREVOST CAR inc.	WIRING DIAGRAM	NO: D060815	REVISION DATE 94-05-23	P. 9a

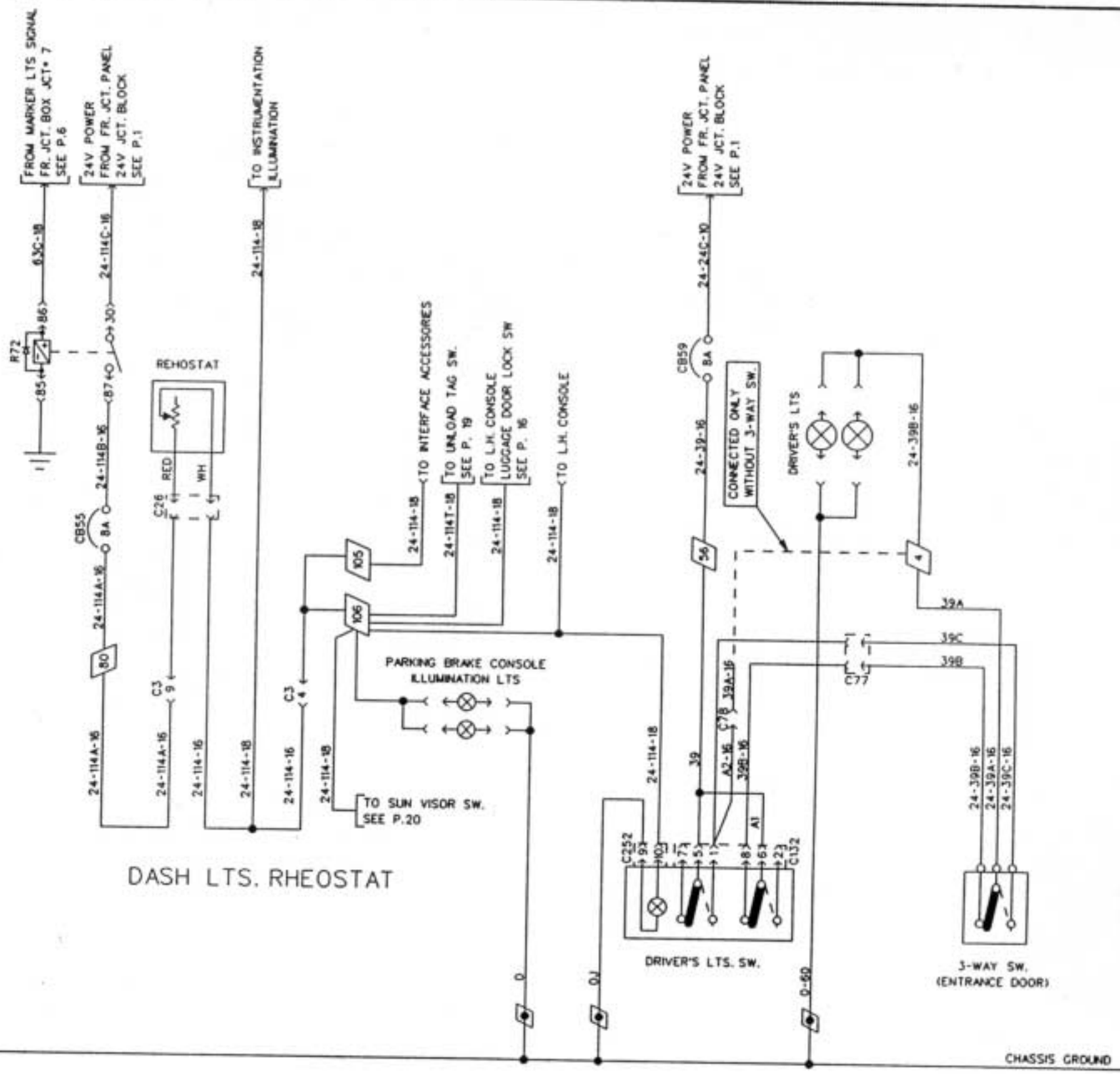

INTERIOR LIGHTING

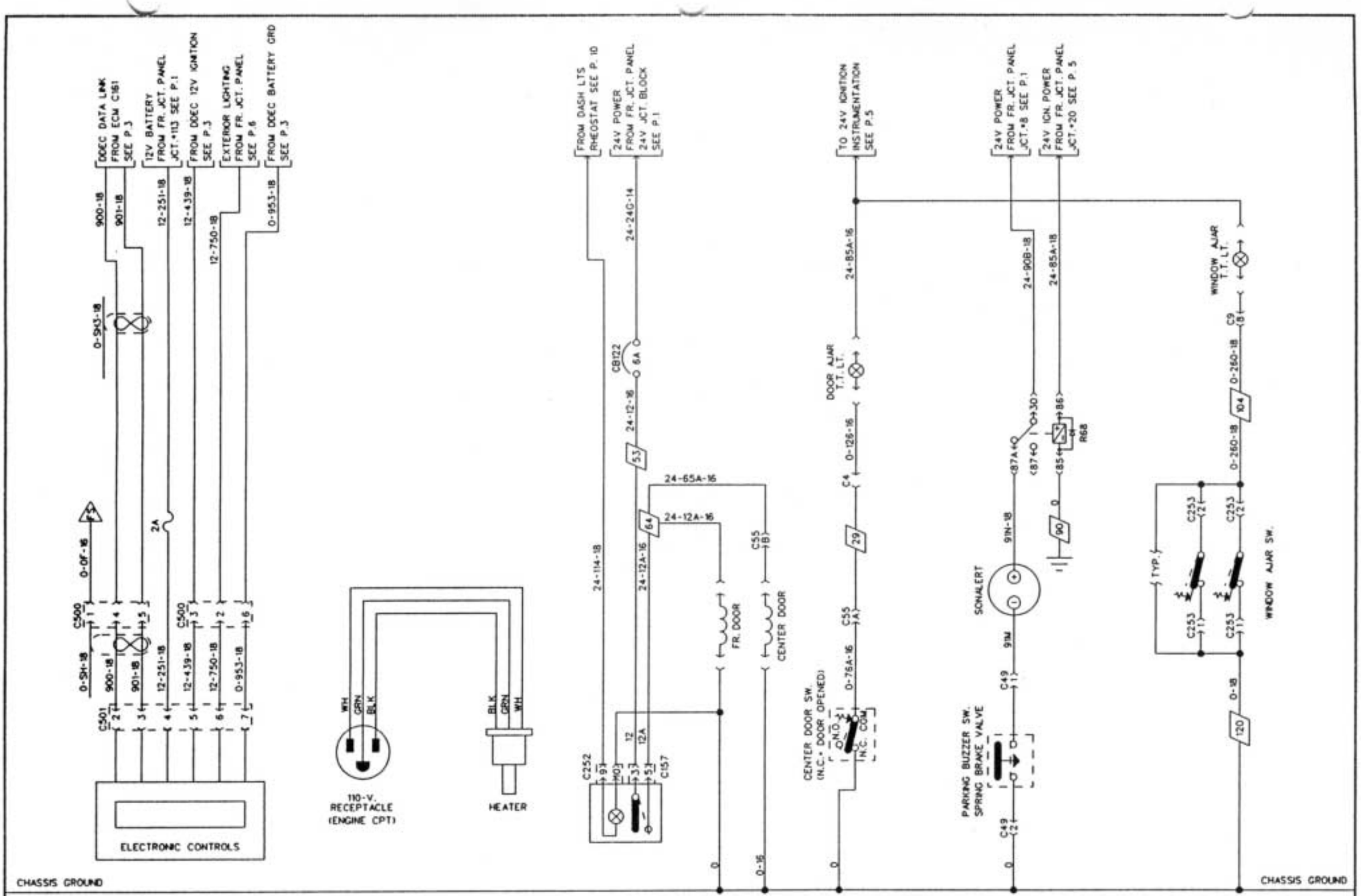

PRODRIVER	ENGINE BLOCK HEATER	ENTRANCE DOOR AIR LOCK	CENTER DOOR AIR LOCK	PARKING BRAKE ALARM	WINDOW AJAR

PREVOST CAR inc.	WIRING DIAGRAM	NO: D060815	REVISION DATE 94-04-14	P. 11

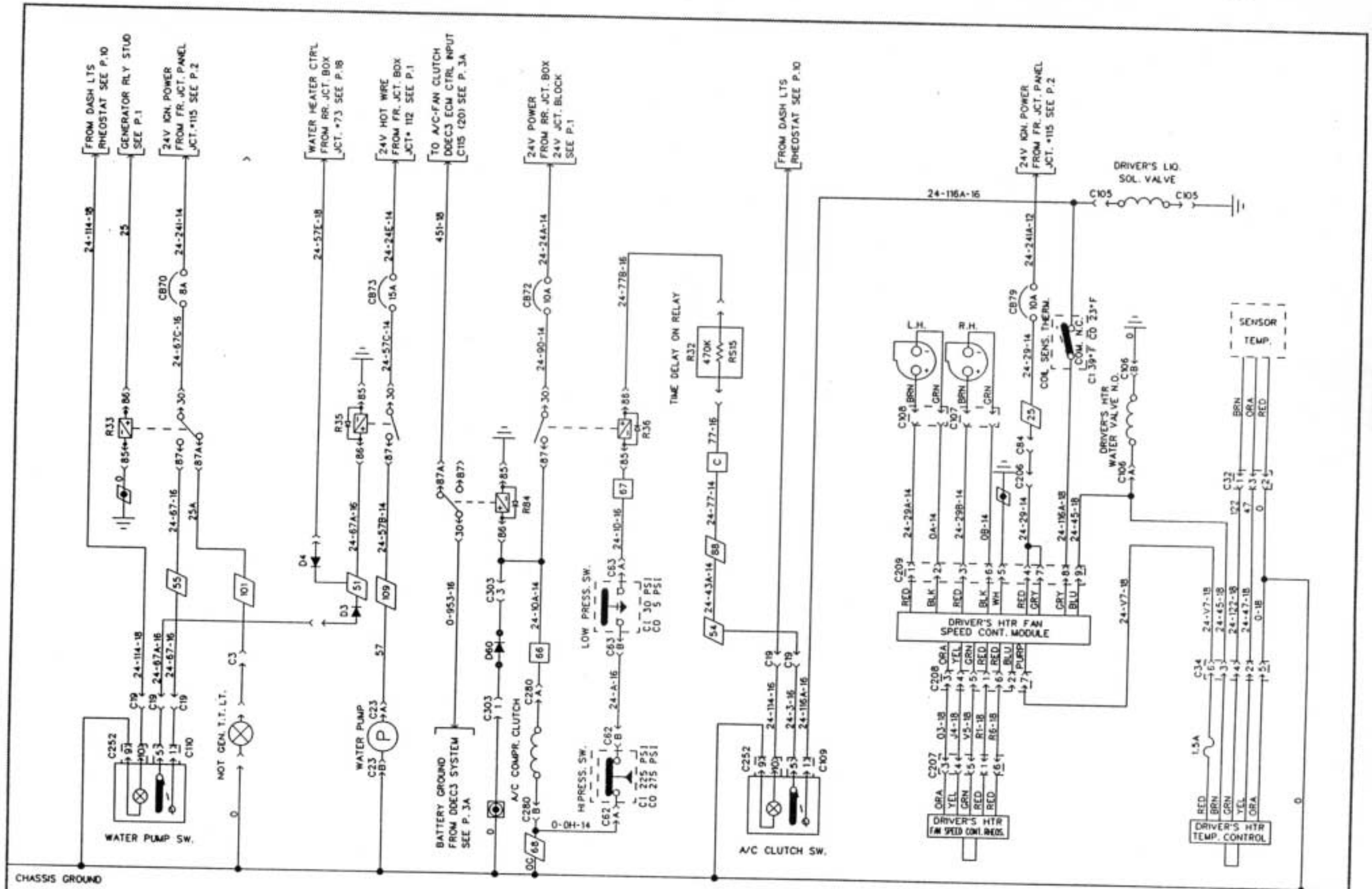

STANDARD A/C AND HEAT SYSTEM

PREVOST CAR inc.	WIRING DIAGRAM	NO: D060815	REVISION DATE 95-02-23	P. 12a

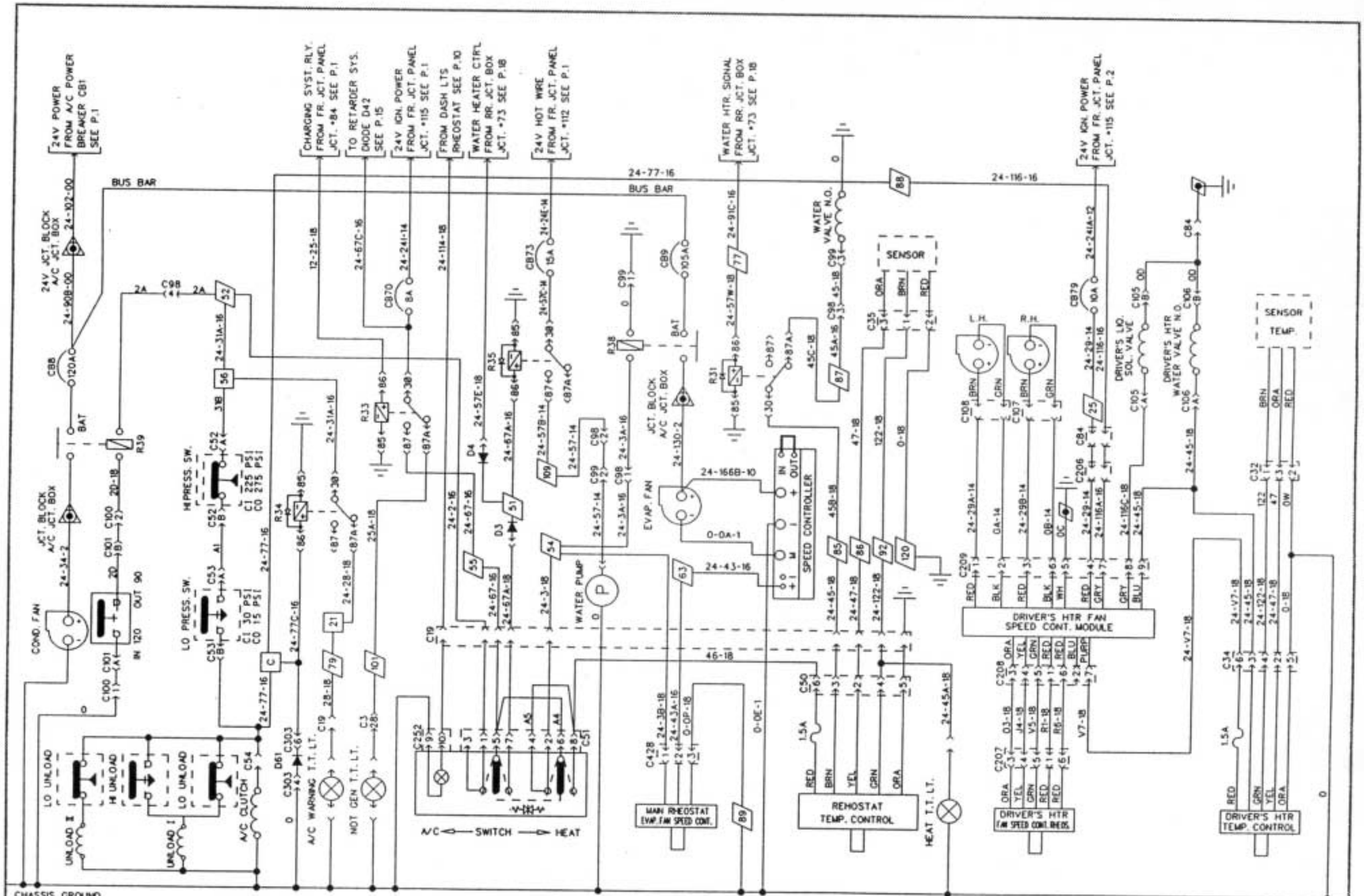

A/C AND HEAT SYSTEM (FULL AIR)

PREVOST CAR inc.	WIRING DIAGRAM	NO: D060815	REVISION DATE 95-02-23	P. 13b

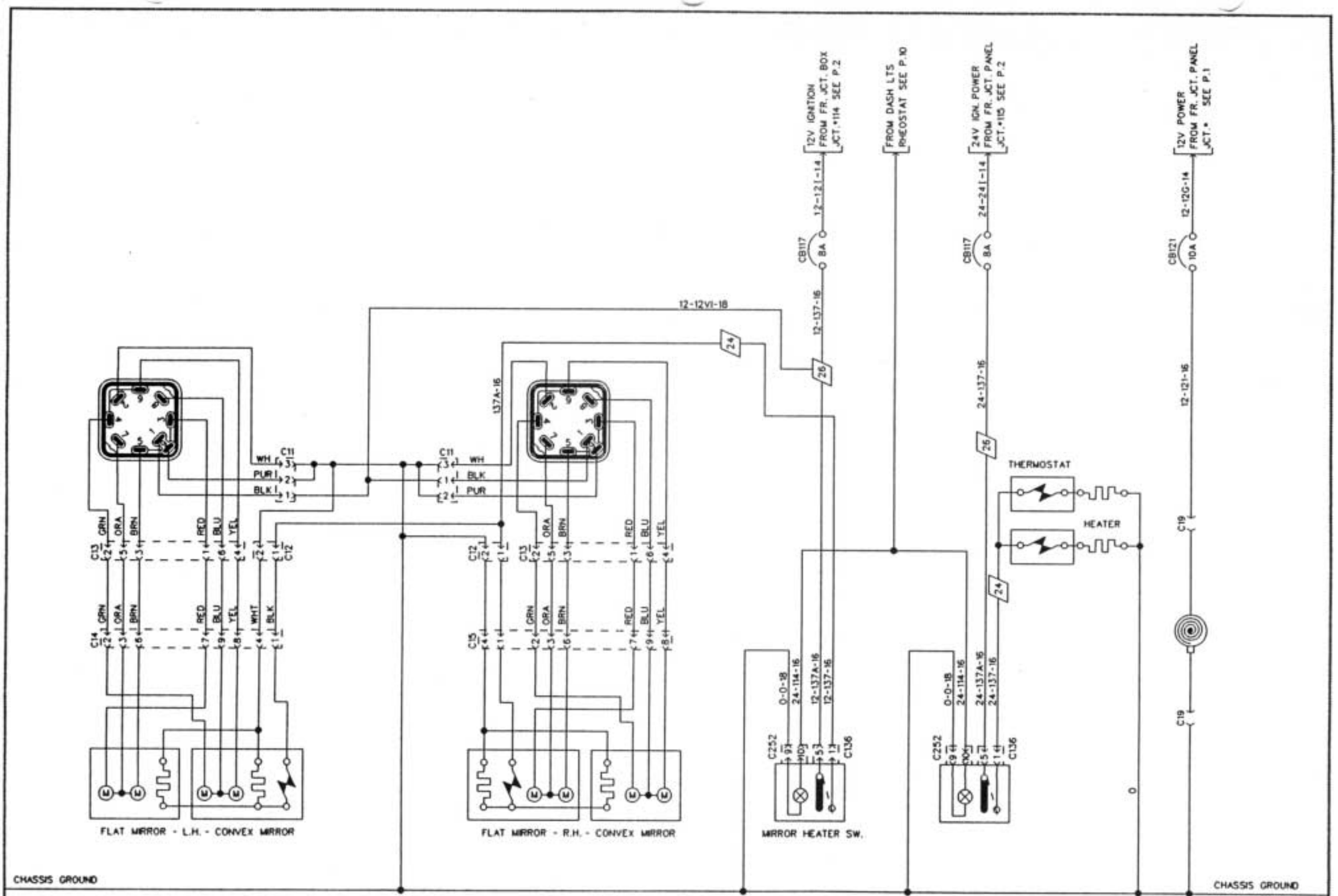

REAR VIEW MIRROR - ADJUSTMENT & HEATER SW. | MIRROR - IKI | CIGAR LIGHTER

PREVOST CAR inc.	WIRING DIAGRAM	NO: D060815	REVISION DATE 94-01-17	P. 14

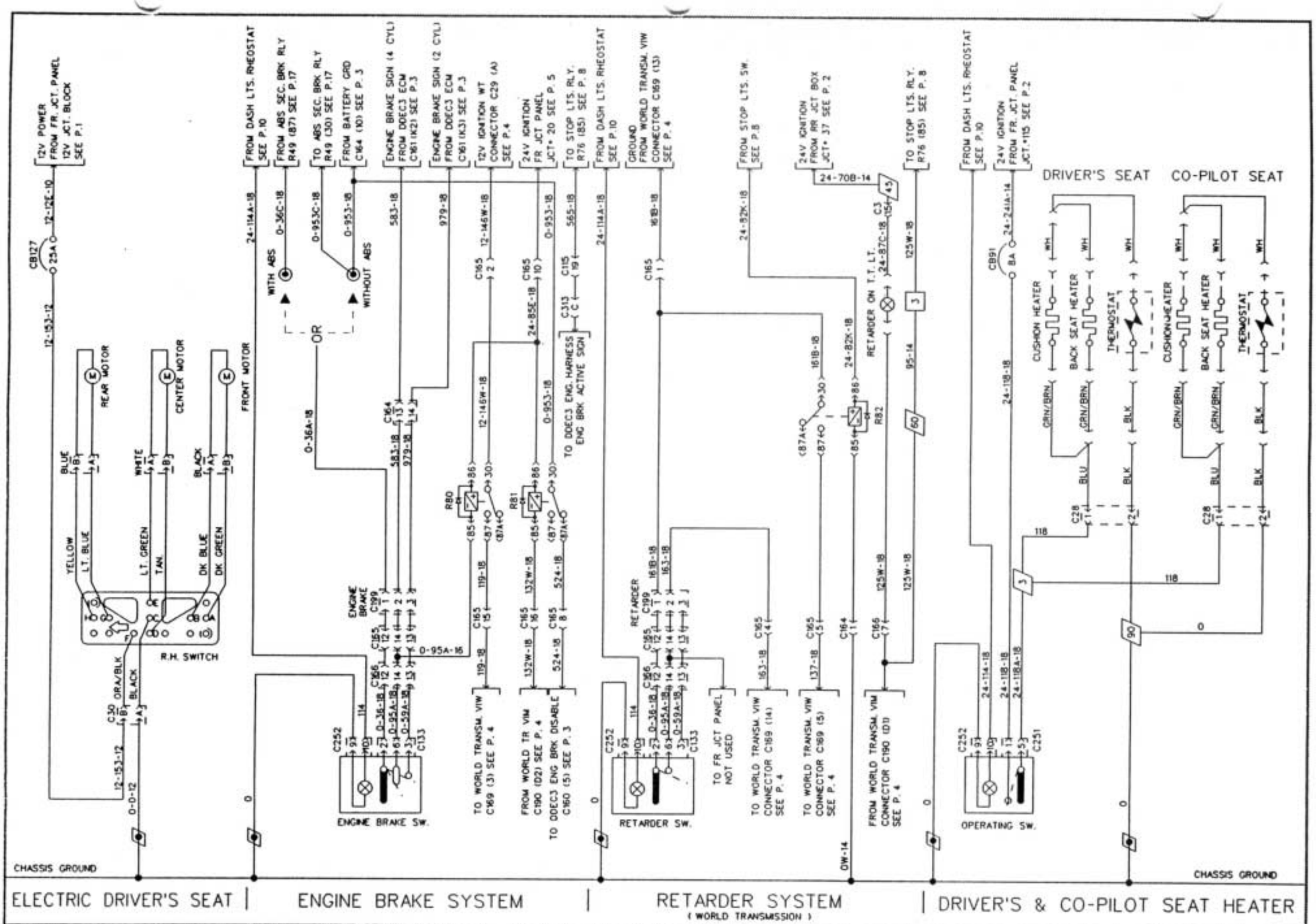

ELECTRIC DRIVER'S SEAT | ENGINE BRAKE SYSTEM | RETARDER SYSTEM (WORLD TRANSMISSION) | DRIVER'S & CO-PILOT SEAT HEATER

PREVOST CAR inc.	WIRING DIAGRAM	NO: D060815	REVISION DATE 94-01-17	P. 15

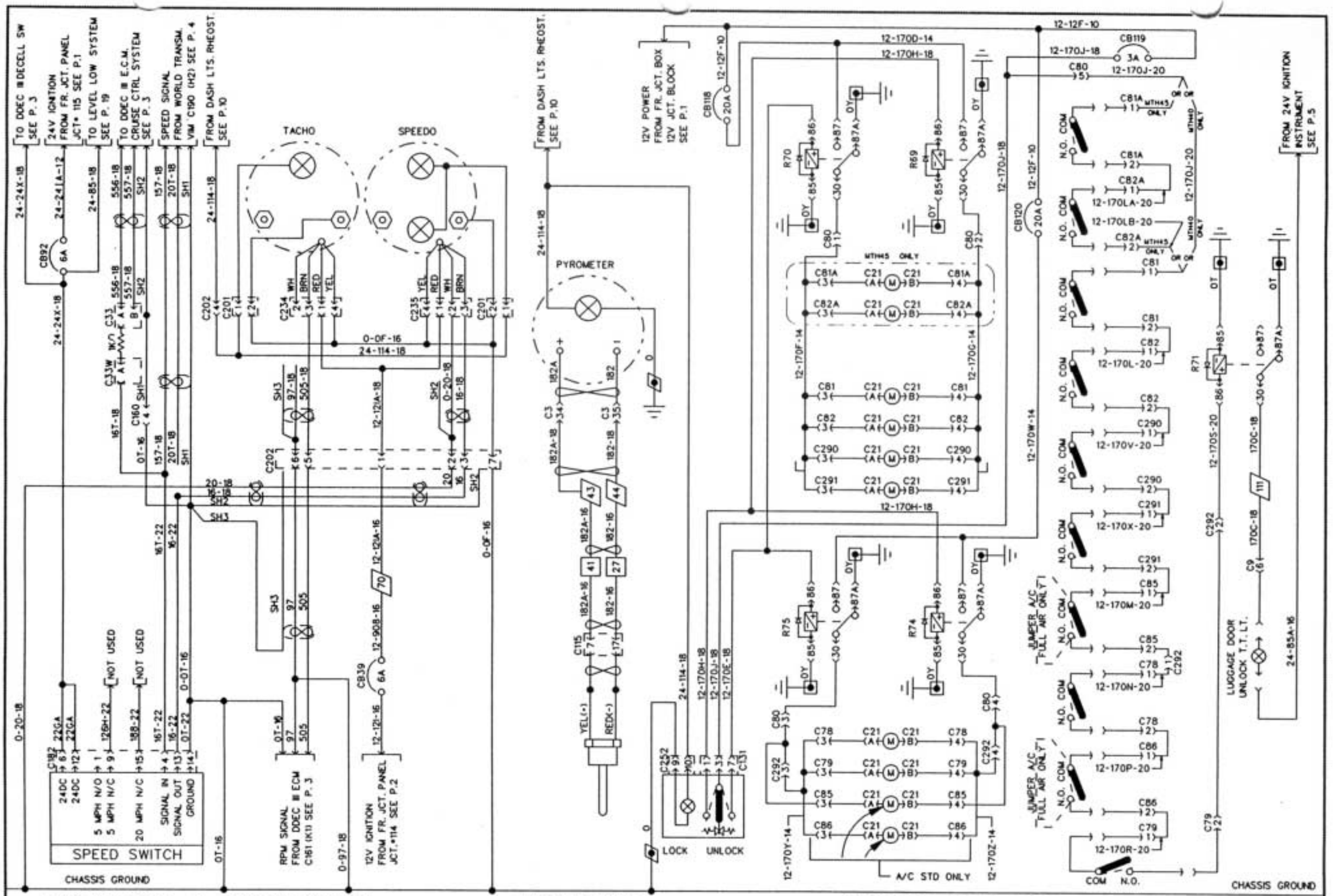

TACHOMETER & SPEEDOMETER | PYROMETER | LUGGAGE DOOR LOCK.

PREVOST CAR inc.	WIRING DIAGRAM	NO: D060815	REVISION DATE 94-11-17	P. 16a

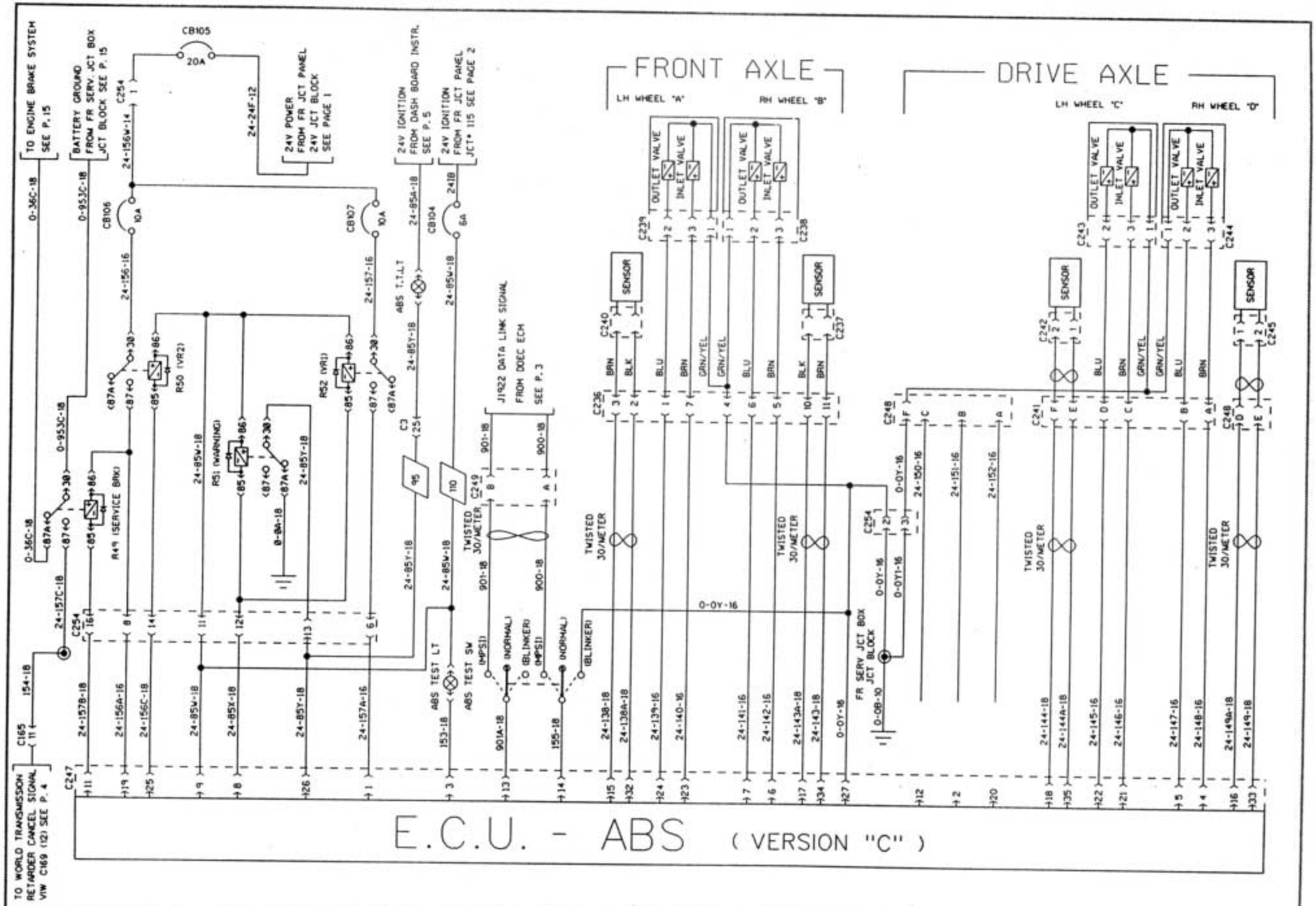

PREVOST CAR inc.	WIRING DIAGRAM	NO: D060815	REVISION DATE 95-03-15	P. 17a

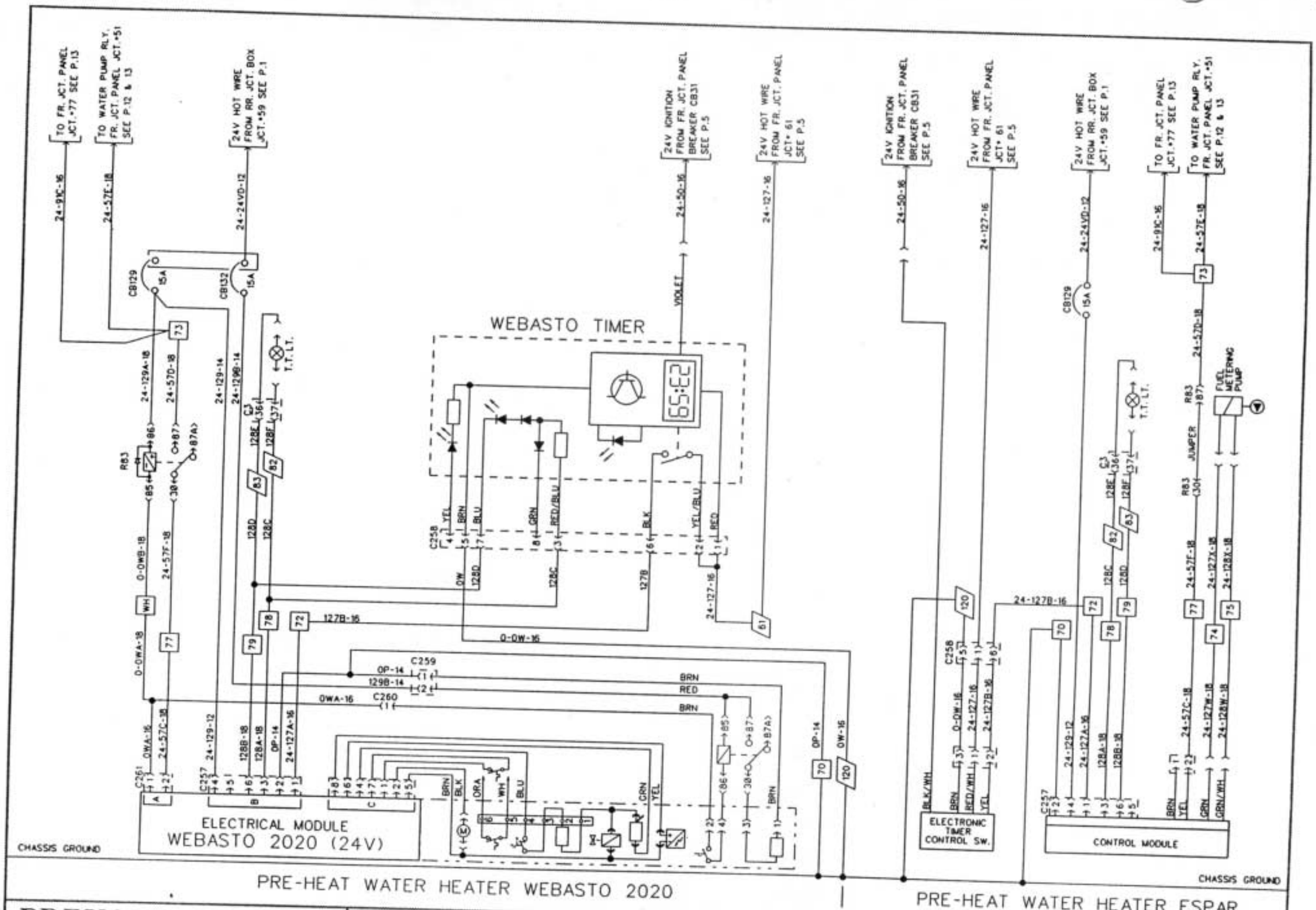

PREVOST CAR inc. | WIRING DIAGRAM | NO: D060815 | REVISION DATE 95-02-23 | P. 18

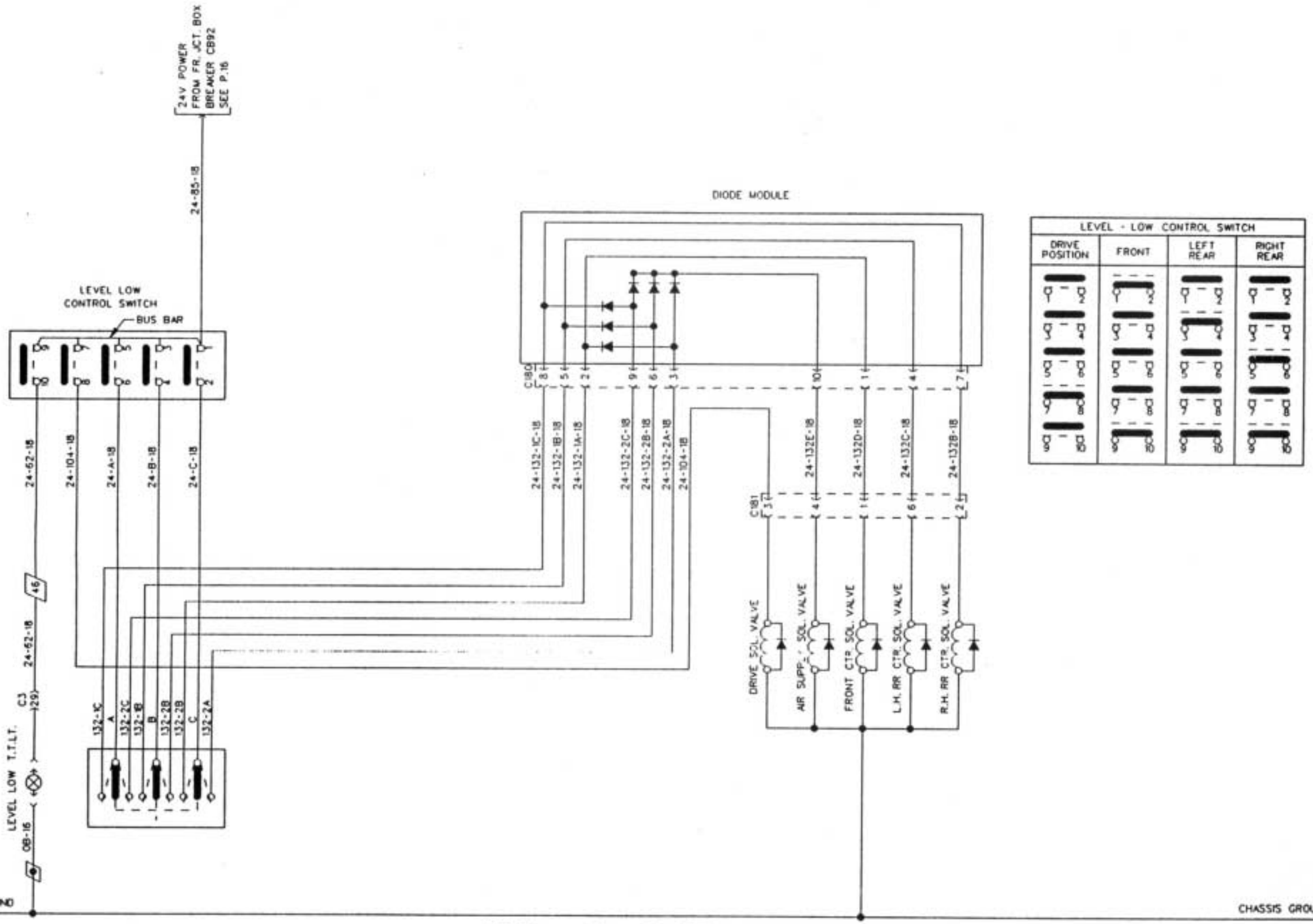

LEVEL - LOW SYSTEM

PREVOST CAR inc.	WIRING DIAGRAM	NO: D060815	REVISION DATE 94-06-14	P. 19

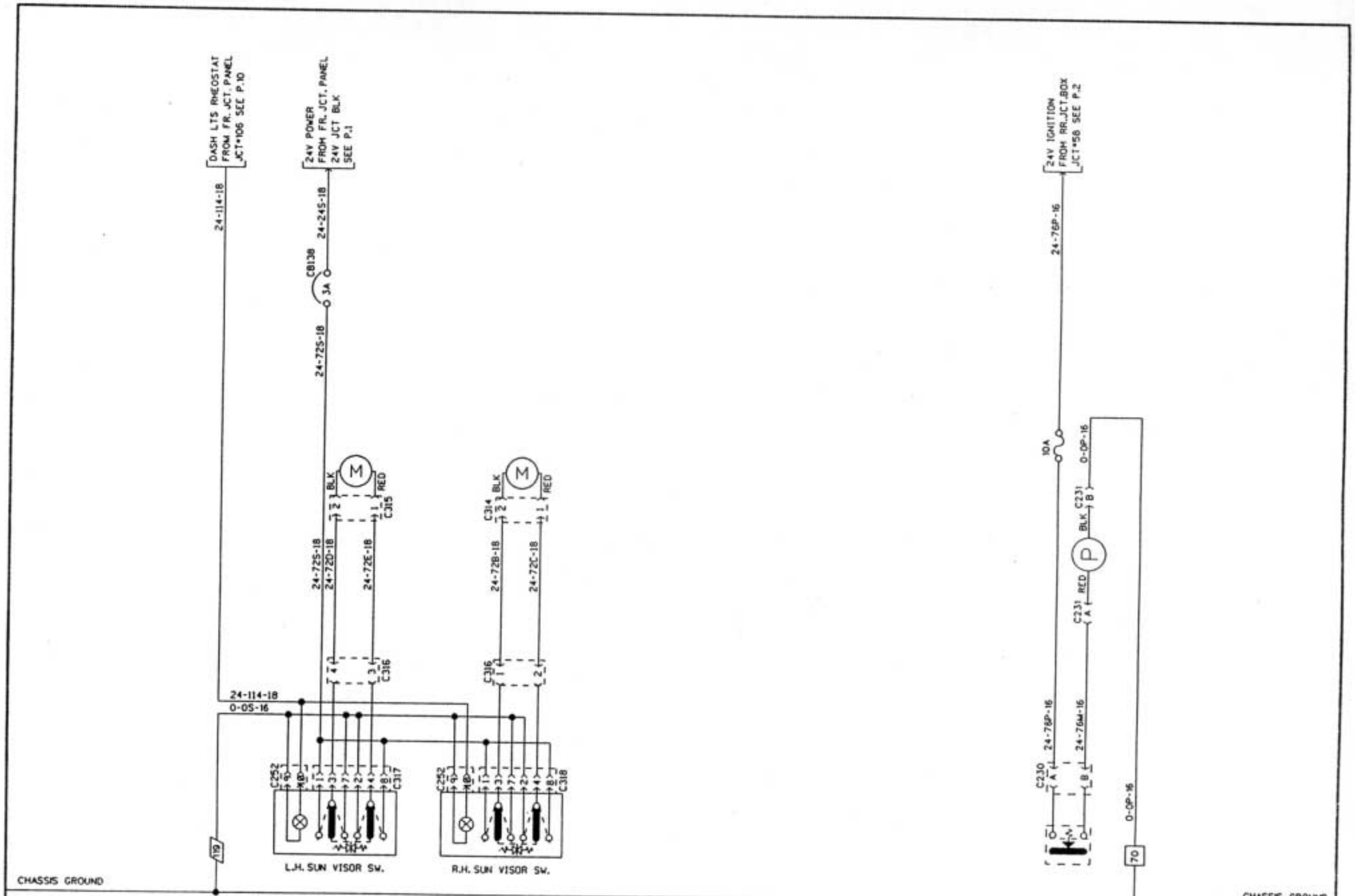

SUN VISOR | FUEL PRIME PUMP

PREVOST CAR inc.	WIRING DIAGRAM	NO: D060815	REVISION DATE 95-02-23	P. 20